EVALUATION REPORT **FLORIDA BUILDING CODE, 8TH EDITION (2023)**

Issued July 24, 2025

Manufacturer: AMRIZE BUILDING ENVELOPE LLC (ELEVATE)
26 Century Blvd
Nashville, TN 37214
(800) 428-4511
www.holcimelevate.com

Manufacturing Location: Waukesha, WI

Quality Assurance: FM Approvals (QUA1860)

SCOPE

Category: Roofing
Subcategory: Roofing Accessories that are an Integral Part of the Roofing System
Code Sections: 1504.5
Properties: Edge securement for low-slope roofs

REFERENCES

Entity	Report No.	Standard	Year
FM Approvals (TST1867)	3052487	ANSI/SPRI/FM 4435-ES-1	2017

PRODUCT DESCRIPTIONS

Product: **Elevate Anchorgard SP Fascia**
Elevate Anchorgard MB Fascia
Elevate Anchorgard Platinum Fascia
Description: Metal Fascia; Max. 8.5-inch outside face
Material: Min. 24 ga. galvanized steel (Max. 8-inch face) or Min. 0.040-inch aluminum; Shall conform with FBC Section 1503.2
Anchor: Min. 0.063-inch extruded aluminum anchor bar with min. 0.100-inch thickness around predrilled holes on vertical face

Product: **Elevate Anchorgard SP Extended Fascia – Single Ply**
Elevate Anchorgard MB Extended Fascia – BUR/MOD Version
Elevate Anchorgard Platinum Extended Fascia – BUR/MOD Version
Description: Metal Fascia; Max. 13-inch outside face
Material: Min. 0.050-inch aluminum; Shall conform with FBC Section 1503.2
Anchor and Cleat: Min. 0.063-inch extruded aluminum anchor bar with min. 0.100-inch thickness around predrilled holes on vertical face and min. 20 ga. galvanized steel continuous cleat

Product: **Elevate Anchorgard Extended Canted Fascia – Galvanized Waterdam Version**
Description: Metal Fascia; Max. 13.5-inch outside face
Material: Min. 0.050-inch aluminum; Shall conform with FBC Section 1503.2
Waterdam: Min. 24 ga. galvanized steel
Anchor and Cleat: Min. 0.050-inch continuous extruded aluminum anchor bar and min. 20 ga. galvanized steel continuous cleat

This evaluation report is provided for State of Florida product approval under Rule 61G20-3. The manufacturer shall notify CREEK Technical Services, LLC of any product changes or quality assurance changes throughout the duration for which this report is valid. This evaluation report does not express nor imply warranty, installation, recommended use, or other product attributes that are not specifically addressed herein.

Product:	**Elevate Anchorgard Drip Edge**
Description:	Metal Fascia; Max. 6-inch outside face
Material:	Min. 24 ga. galvanized steel or Min. 0.040-inch aluminum; Shall conform with FBC Section 1503.2
Anchor:	Min. 0.063-inch extruded aluminum anchor bar with min. 0.100-inch thickness around predrilled holes on vertical face

Product:	**Elevate Anchorgard SP HG Fascia** **Elevate Anchorgard Platinum HG Fascia**
Description:	Metal Fascia; Max. 7-inch outside face
Material:	Min. 0.050-inch aluminum; Shall conform with FBC Section 1503.2
Anchor:	Min. 0.063-inch extruded aluminum anchor bar with min. 0.100-inch thickness around predrilled holes on vertical face`

Product:	**Elevate Rail Fascia – BUR/Mod Version**
Description:	Metal Fascia; Max. 8-inch outside face
Material:	Min. 24 ga. galvanized steel or Min. 0.040-inch aluminum; Shall conform with FBC Section 1503.2
Rail and Clips:	Min. 20 ga. galvanized steel rail and 6-inch wide stainless steel spring clips

Product:	**Elevate Flash-Through Drip Edge – BUR/Mod Version with Continuous Cleat**
Description:	Metal Fascia; Max. 6-inch outside face; Max. 4-inch top flange
Material:	Min. 24 ga. galvanized steel or Min. 0.040-inch aluminum; Shall conform with FBC Section 1503.2
Cleat:	Min. 22 ga. galvanized steel continuous cleat

Product:	**Elevate Drip Edge with Continuous Cleat** **Elevate TPO Drip Edge with Continuous Cleat** **Elevate PVC Drip Edge with Continuous Cleat**
Description:	Metal Fascia; Max. 6-inch or Max. 10-inch outside face; Max. 4-inch top flange
Material:	Min. 24 ga. galvanized steel (Max. 8-inch face) with optional TPO or PVC coating or Min. 0.040-inch aluminum with optional TPO or PVC coating; Shall conform with FBC Section 1503.2
Cleat:	Min. 22 ga. galvanized steel continuous cleat

Product:	**Elevate Rail Fascia – Single Ply Version**
Description:	Metal Fascia; Max. 8-inch outside face
Material:	Min. 24 ga. galvanized steel or Min. 0.040-inch aluminum; Shall conform with FBC Section 1503.2
Cleat and Clips:	Min. 20 ga. galvanized steel continuous cleat and 6-inch wide stainless steel spring clips

Product:	**Elevate Extended Rail Fascia – Single Ply Version**
Description:	Metal Fascia; Max. 12.5-inch outside face
Material:	Min. 0.050-inch aluminum; Shall conform with FBC Section 1503.2
Cleat and Clips:	Min. 20 ga. galvanized steel continuous cleat and 6-inch wide stainless steel spring clips

Product:	**Elevate Stop**
Description:	Metal Fascia; Max. 6-inch or Max.10-inch outside face; Max. 4-inch top flange
Material:	Min. 24 ga. galvanized steel (Max. 8-inch face) with optional TPO or PVC coating or Min. 0.040-inch aluminum with optional TPO or PVC coating; Shall conform with FBC Section 1503.2
Cleat:	Min. 22 ga. galvanized steel continuous cleat

This evaluation report is provided for State of Florida product approval under Rule 61G20-3. The manufacturer shall notify CREEK Technical Services, LLC of any product changes or quality assurance changes throughout the duration for which this report is valid. This evaluation report does not express nor imply warranty, installation, recommended use, or other product attributes that are not specifically addressed herein.

Product:	**Elevate Edgegard + Fascia - Single Ply Application Crimp-On Version - Thin**
Description:	Metal Fascia; Max. 8-inch outside face
Material:	Min. 24 ga. steel or Min. 0.040-inch aluminum; Shall conform with FBC Section 1503.2
Cant(Waterdam):	Min. 24 ga. galvanized steel cant/waterdam

Product:	**Elevate Edgegard + Fascia - Single Ply Application Crimp-On Version - Thick**
Description:	Metal Fascia; Max. 12.5-inch outside face
Material:	Min. 0.050-inch aluminum; Shall conform with FBC Section 1503.2
Cant(Waterdam):	Min. 24 ga. galvanized steel cant/waterdam

Product:	**Elevate Edgegard + Fascia - Single Ply Application Snap-On Version** **Elevate System 300 Fascia – BUR/Mod Snap-On Version**
Description:	Metal Fascia; Max. 12.75-inch outside face
Material:	Min. 24 ga. galvanized steel (Max. 8-inch face) or min. 0.040-inch aluminum; Shall conform with FBC Section 1503.2
Cant(Waterdam) & Clips	Min. 24 ga. galvanized steel cant/waterdam and 6-inch wide stainless steel spring clip

Product:	**Elevate Coping**
Description:	Metal coping; Max. 12-inch outside face; Max. 4-inch inside face; Max. 32-inch wall width
Material:	Min. 24 ga. galvanized steel (Max. 8-inch outside face) or min. 0.040-inch aluminum; Shall conform with FBC Section 1503.2
Clips:	12-inch wide min. 20 ga. galvanized steel anchor clips

Product:	**Elevate Flush Face Coping**
Description:	Metal coping; Max. 12-inch outside face; Max. 4-inch inside face; Max. 32-inch wall width
Material:	Min. 24 ga. galvanized steel (Max. 8-inch outside face) or min. 0.040-inch aluminum; Shall conform with FBC Section 1503.2
Clips:	12-inch wide min. 20 ga. galvanized steel anchor clips

Product:	**Elevate Gold Coping**
Description:	Metal coping; Max. 12-inch outside face; Max. 4-inch inside face; Max. 32-inch wall width
Material:	Min. 24 ga. galvanized steel (Max. 8-inch outside face) or min. 0.040-inch aluminum; Shall conform with FBC Section 1503.2
Clips:	12-inch wide min. 16 ga. galvanized steel anchor clips

Product:	**Elevate Continuous Cleat Coping**
Description:	Metal coping; Max. 12-inch outside face; Max. 4-inch inside face; Max. 32-inch wall width
Material:	Min. 24 ga. galvanized steel (Max. 8-inch outside face) or 0.040-inch aluminum; Shall conform with FBC Section 1503.2
Cleats:	Two (2) min. 20 ga. galvanized steel continuous cleats for wall width <32-inch; Two (2) min. 16 ga. galvanized steel continuous cleats for wall width =32-inch

Product:	**Elevate Single Cantilever Coping**
Description:	Metal coping; Max. 10-inch outside face; Max. 4-inch inside face; Max. 24-inch wall width
Material:	Min. 24 ga. galvanized steel (Max. 8-inch outside face) or min. 0.040-inch aluminum; Shall conform with FBC Section 1503.2
Clips:	12-inch wide and min. 20 ga. galvanized steel anchor clip riser with a 16 gal. galvanized steel base

This evaluation report is provided for State of Florida product approval under Rule 61G20-3. The manufacturer shall notify CREEK Technical Services, LLC of any product changes or quality assurance changes throughout the duration for which this report is valid. This evaluation report does not express nor imply warranty, installation, recommended use, or other product attributes that are not specifically addressed herein.

LIMITATIONS

1. This report is not for use in the HVHZ.
2. Fire classification is not within the scope of this evaluation.
3. Edge metal systems shall not be used on buildings with roof slopes greater than 2:12.
4. Installation of the evaluated products shall comply with this report, the FBC and the manufacturer's published application instructions. Where discrepancies exist between these sources, the more restrictive and FBC compliant installation detail shall prevail.
5. Maximum design pressures listed under the Installation section of the report shall apply to the perimeter zone of the roof without modification. Rational analysis for increasing the fastening density may be submitted by a qualified design professional to meet increased design pressures for the corner zones of the roof.
6. All products listed in this report shall be manufactured under a quality assurance program in compliance with Rule 61G20-3.

COMPLIANCE STATEMENT

This report has been prepared in accordance with F.A.C. Rule 61G20-3.

ZACHARY R. PRIEST
LICENSE
No 74021
STATE OF
FLORIDA
PROFESSIONAL ENGINEER

This item has been digitally signed and sealed by Zachary R. Priest, PE, on 7/24/2025.

Printed copies of this document are not considered signed and sealed and the signature must be verified on any electronic copies.

Digitally signed by Zachary R. Priest

2025.07.24 16:10:45 -04'00'

Zachary R. Priest, P.E.
Florida Registration No. 74021
Organization No. ANE9641

CERTIFICATION OF INDEPENDENCE

CREEK Technical Services, LLC does not have, nor will it acquire, a financial interest in any company manufacturing or distributing products under this evaluation.

CREEK Technical Services, LLC is not owned, operated, or controlled by any company manufacturing or distributing products under this evaluation.

Zachary R. Priest, P.E. does not have, nor will acquire, a financial interest in any company manufacturing or distributing products under this evaluation.

Zachary R. Priest, P.E. does not have, nor will acquire, a financial interest in any other entity involved in the approval process of the product.

APPENDICES

1) APPENDIX A – Installation and Approved Systems (10 pages)
2) APPENDIX B – Product Images (14 pages)

This evaluation report is provided for State of Florida product approval under Rule 61G20-3. The manufacturer shall notify CREEK Technical Services, LLC of any product changes or quality assurance changes throughout the duration for which this report is valid. This evaluation report does not express nor imply warranty, installation, recommended use, or other product attributes that are not specifically addressed herein.

INSTALLATION AND APPROVED SYSTEMS

The following notes shall be observed when using the assembly tables below.

1. Maximum Design Pressure (*MDP*) was calculated using a 2:1 margin of safety per FBC Section 1504.9.
2. *MDP's* for all coping systems are valid for design wind loads applied to the vertical outside and inside faces, as well as the horizontal face.
3. *MDP's* for all fascia, edge flashing, and gravel stop systems are valid for design wind loads applied to the vertical outside face only
4. Refer to **LIMITATIONS** and sections of this evaluation when using the table(s) below.
5. The on-center (o.c.) spacing given is the maximum allowable attachment spacing for the rated system.
6. Allowable substrates for all systems shall be wood nailers.
7. Unless otherwise specified, the Wood substrate shall be minimum No. 2 SPF (S.G. = 0.42) 2x lumber. Substrate attachment shall be designed by others in accordance with FBC requirements to meet the minimum design requirements for the project.

Assembly System Numbers and Definitions	
A-#	Elevate Fascia, Edge Flashing and Gravel Stops
B-#	Elevate Coping
C-#	Elevate Continuous Cleat Coping
D-#	Elevate Flush Face Coping
E-#	Elevate Gold Coping
F-#	Elevate Single Cantilever Coping

Elevate Fascia, Edge Flashing and Gravel Stops						
System Number	Name	Face Height (H) & Material (M)	Attachment Component	Attachment Component Detail	Cover Attachment	*MDP* (psf)
A-1	Elevate Edgegard+Fascia - Single Ply Application - Crimp-On Version - Thick	H: Max 12.5" M: Min. 0.050" Al	Min. 24 ga. galvanized steel cant/waterdam	Cant/Waterdam secured with 1.25" ring shank nails spaced 12-inch o.c. on the vertical face and 2.25-inch from the bottom of drip edge and spaced 6-inch o.c. on the top and 0.5-inch from the edge; Approved single-ply is then applied over the cant	Applied over the cant and crimped 18-inch o.c.	**-48.5**
A-2	Elevate Edgegard+Fascia- Single Ply Application - Snap-On Version or Elevate System 300 Fascia - BUR/Mod Snap-On Version	H: Max 12.625" M: Min. 0.050" Al	Min. 24 ga. galvanized steel cant/waterdam; 6-inch wide stainless steel spring clips	Cant/Waterdam secured with 1.25" ring shank nails spaced 12-inch o.c. on the vertical face and 2.25-inch from the bottom of drip edge and spaced 6-inch o.c. on the top and 0.5-inch from the edge; Spring clips spaced 48-inch o.c.; Approved single-ply is then applied over the cant	Snapped into place	**-58**
A-3	Elevate Edgegard+Fascia- Single Ply Application - Crimp-On Version - Thin	H: Max 8" M: Min. 0.040" Al or Min. 24 ga steel	Min. 24 ga. galvanized steel cant/waterdam	Cant/Waterdam secured with 1.25" ring shank nails spaced 12-inch o.c. on the vertical face and 2.25-inch from the bottom of drip edge and spaced 6-inch o.c. on the top and 0.5-inch from the edge; Approved single-ply is then applied over the cant	Applied over the cant and crimped 18-inch o.c.	**-63**

This evaluation report is provided for State of Florida product approval under Rule 61G20-3. The manufacturer shall notify CREEK Technical Services, LLC of any product changes or quality assurance changes throughout the duration for which this report is valid. This evaluation report does not express nor imply warranty, installation, recommended use, or other product attributes that are not specifically addressed herein.

Elevate Fascia, Edge Flashing and Gravel Stops						
System Number	Name	Face Height (H) & Material (M)	Attachment Component	Attachment Component Detail	Cover Attachment	*MDP* (psf)
A-4	Elevate Anchorgard Extended Canted Fascia - Galvanized Waterdam Version	H: Max 13.5” M: Min. 0.050” Al	Extruded Al Anchor Bar; Min. 20 ga. galvanized steel cleat; Min. 24 ga. galvanized steel waterdam	Waterdam secured with 1.25” ring shank nails spaced 6-inch o.c. and 0.5-inch from edge of roof flange; Anchor bar secured with #10-2” stainless steel screws spaced 12-inch o.c. on the vertical face 2.5-inch from the top of anchor bar; Cleat secured with 1/4 x 1 1/4” screws spaced 24-inch o.c. on the vertical face 2-inch from the bottom of the cleat	Snapped into place	**-69.5**
A-5	Elevate Extended Rail Fascia - Single Ply Version	H: Max 12.5” M: Min. 0.050” Al	Min. 20 ga. galvanized steel continuous cleat; 6-inch wide stainless steel spring clips	Cleat secured in two (2) rows with the top row secured with #10-2” stainless steel screws spaced 12-inch o.c. and 1-inch from the upper horizontal surface and the bottom row secured with 1/4 x 1 1/4” screws spaced 24-inch o.c. and 2.125-inch from the bottom edge of cleat; Spring clips spaced 48-inch o.c. over the rail	Snapped into place	**-73**
A-6	Elevate Anchorgard SP Fascia, Elevate Anchorgard MB Fascia or Elevate Anchorgard Platinum Fascia	H: Max 8.5” M: Min. 0.040” Al or Min. 24 ga steel (H ≤ 8.0”)	Min. 0.080” Extruded Aluminum Anchor Bar	Anchor bar secured with #10-2” stainless steel screws spaced 12-inch o.c. in the top row of holes on the vertical face and 1.25-inch from the top of anchor bar	Slid over anchor bar	**-77.5**
A-7	Elevate Rail Fascia-Single Ply Version	H: Max 8” M: Min. 0.040” Al or Min. 24 ga steel	Min. 20 ga. galvanized steel continuous cleat; 6-inch wide stainless steel spring clips	Rail secured with #10-2” stainless steel screws spaced 12-inch o.c. on the vertical face and 13/16-inch from the upper horizontal surface; Spring clips spaced 48-inch o.c. over the rail	Snapped into place	**-77.5**
A-8	Elevate Anchorgard SP Extended Fascia - Single Ply, Elevate Anchorgard MB Extended Fascia - BUR/MOD Version or Elevate Anchorgard Platinum Extended Fascia - BUR/MOD Version	H: Max 13” M: Min. 0.050” Al	Extruded Al Anchor Bar; Min. 20 ga. galvanized steel cleat	Anchor bar secured with #10-2” stainless steel screws spaced 12-inch o.c. on the vertical face 1.25-inch from the top of anchor bar; Cleat secured with 1/4 x 1 1/4” screws spaced 24-inch o.c. on the vertical face 2.125-inch from the bottom of the cleat	Slid over anchor bar	**-88**
A-9	Elevate Anchorgard SP Fascia, Elevate Anchorgard MB Fascia or Elevate Anchorgard Platinum Fascia	H: Max 8.5” M: Min. 0.040” Al or Min. 24 ga steel (H ≤ 8.0”)	Min. 0.080” Extruded Aluminum Anchor Bar	Anchor bar secured with #10-2” stainless steel screws on the vertical face in two (2) staggered rows with the top row spaced 12-inch o.c. and 1.25-inch from the top of anchor bar and the bottom row spaced 24-inch o.c. and 2.75-inch from the top of anchor bar	Slid over anchor bar	**-88**

This evaluation report is provided for State of Florida product approval under Rule 61G20-3. The manufacturer shall notify CREEK Technical Services, LLC of any product changes or quality assurance changes throughout the duration for which this report is valid. This evaluation report does not express nor imply warranty, installation, recommended use, or other product attributes that are not specifically addressed herein.

Elevate Fascia, Edge Flashing and Gravel Stops						
System Number	Name	Face Height (H) & Material (M)	Attachment Component	Attachment Component Detail	Cover Attachment	*MDP* (psf)
A-10	Elevate Drip Edge w/ Continuous Cleat, Elevate TPO Drip Edge w/ Continuous Cleat or Elevate PVC Drip Edge w/ Continuous Cleat	H: Max 10"; 3" top flange M: Min. 0.040" Al or Min. 24 ga steel (H ≤ 8.0")	Min. 22 ga. galvanized steel continuous cleat	Cleat secured with 1.25" ring shank nails spaced 12-inch o.c. on the vertical face and 8.5-inch from the top of the wall	Top flange of cover is fastened with 1.25" ring shank nails spaced 6-inch o.c. and 0.4375-inch from edge of flange	**-88.5**
A-11	Elevate Rail Fascia-BUR/Modified Version	H: Max 8" M: Min. 0.040" Al or Min. 24 ga steel	Min. 20 ga. galvanized steel rail; 6-inch wide stainless steel spring clips	Rail secured with #10-2" stainless steel screws on the vertical face in two (2) rows with the top row spaced 12-inch o.c. and 1.25-inch from the top of rail and the bottom row spaced 24-inch o.c. and 2.75-inch from the top of rail; Spring clips spaced 48-inch o.c. over the rail	Snapped into place	**-89.5**
A-12	Elevate Edgegard+Fascia-Single Ply Application - Crimp-On Version - Thick	H: Max 8" M: Min. 0.050" Al	Min. 24 ga. galvanized steel cant/waterdam	Cant/Waterdam secured with 1.25" ring shank nails spaced 12-inch o.c. on the vertical face and 2.25-inch from the bottom of drip edge and spaced 6-inch o.c. on the top and 0.5-inch from the edge; Approved single-ply is then applied over the cant	Applied over the cant and crimped 18-inch o.c.	**-98**
A-13	Elevate Edgegard+Fascia-Single Ply Application - Snap-On Version or Elevate System 300 Fascia - BUR/Mod Snap-On Version	H: Max 8.25" M: Min. 0.040" Al or Min. 24 ga steel (H ≤ 8.0")	Min. 24 ga. galvanized steel cant/waterdam; 6-inch wide stainless steel spring clips	Cant/Waterdam secured with 1.25" ring shank nails spaced 12-inch o.c. on the vertical face and 2.25-inch from the bottom of drip edge and spaced 6-inch o.c. on the top and 0.5-inch from the edge; Spring clips spaced 48-inch o.c.; Approved single-ply is then applied over the cant	Snapped into place	**-98**
A-14	Elevate Edgegard+Fascia-Single Ply Application - Snap-On Version or Elevate System 300 Fascia - BUR/Mod Snap-On Version	H: Max 8.25" M: Min. 0.050" Al	Min. 24 ga. galvanized steel cant/waterdam; 6-inch wide stainless steel spring clips	Cant/Waterdam secured with 1.25" ring shank nails spaced 12-inch o.c. on the vertical face and 2.25-inch from the bottom of drip edge and spaced 6-inch o.c. on the top and 0.5-inch from the edge; Spring clips spaced 48-inch o.c.; Approved single-ply is then applied over the cant	Snapped into place	**-108**
A-15	Elevate Gravel Stop	H: Max 6"; 3" top flange 1" rise M: Min. 0.040" Al or Min. 24 ga steel	Min. 22 ga. galvanized steel continuous cleat	Cleat secured with 1.25" ring shank nails spaced 12-inch o.c. on the vertical face and 13/16-inch from the top of the wall	Top flange of cover is fastened with 1.25" ring shank nails spaced 6-inch o.c. and 0.4375-inch from edge of flange	**-108**

This evaluation report is provided for State of Florida product approval under Rule 61G20-3. The manufacturer shall notify CREEK Technical Services, LLC of any product changes or quality assurance changes throughout the duration for which this report is valid. This evaluation report does not express nor imply warranty, installation, recommended use, or other product attributes that are not specifically addressed herein.

Elevate Fascia, Edge Flashing and Gravel Stops						
System Number	Name	Face Height (H) & Material (M)	Attachment Component	Attachment Component Detail	Cover Attachment	*MDP* (psf)
A-16	Elevate Gravel Stop	H: Max 10”; 3” top flange 1” rise M: Min. 0.040” Al or Min. 24 ga steel (H ≤ 8.0”)	Min. 22 ga. galvanized steel continuous cleat	Cleat secured with 1.25” ring shank nails spaced 12-inch o.c. on the vertical face and 1.5-inch from the bottom of cleat	Top flange of cover is fastened with 1.25” ring shank nails spaced 6-inch o.c. and 0.4375-inch from edge of flange	**-129**
A-17	Elevate Anchorgard SP Fascia, Elevate Anchorgard MB Fascia or Elevate Anchorgard Platinum Fascia	H: Max 5.5” M: Min. 0.040” Al or Min. 24 ga steel	Min. 0.080” Extruded Aluminum Anchor Bar	Anchor bar secured with #10-2” stainless steel screws spaced 12-inch o.c. on the vertical face 1.25-inch from the top of anchor bar	Slid over anchor bar	**-137.5**
A-18	Elevate Flash-Through Drip Edge - BUR/Mod Version with Continuous Cleat	H: Max 6”; 4” top flange M: Min. 0.040” Al or Min. 24 ga steel	Min. 22 ga. galvanized steel continuous cleat	Cleat secured with 1.25” ring shank nails spaced 12-inch o.c. on the vertical face and 0.813-inch from the top of the wall	Top flange of cover is fastened with 1.25” ring shank nails in two (2) staggered rows spaced 12-inch o.c. Rows 1.75-inch and 3-inch from edge of wall	**-138**
A-19	Elevate Drip Edge w/ Continuous Cleat, Elevate TPO Drip Edge w/ Continuous Cleat or Elevate PVC Drip Edge w/ Continuous Cleat	H: Max 6”; 3” top flange M: Min. 0.040” Al or Min. 24 ga stel	Min. 22 ga. galvanized steel continuous cleat	Cleat secured with 1.25” ring shank nails spaced 12-inch o.c. on the vertical face and 0.813-inch from the top of the wall	Top flange of cover is fastened with 1.25” ring shank nails spaced 6-inch o.c. and 0.5-inch from edge of flange	**-141**
A-20	Elevate Anchorgard SP HG Fascia or Elevate Anchorgard Platinum HG Fascia	H: Max 7” M: Min. 0.050” Al	Extruded Al Anchor Bar	Anchor bar secured with #10-2” stainless steel screws spaced 12-inch o.c. on the vertical face and 1.25-inch from the top of anchor bar	Slid over anchor bar	**-182.5**
A-21	Elevate Rail Fascia-Single Ply Version	H: Max 5” M: Min. 0.040” Al or Min. 24 ga steel	Min. 20 ga. galvanized steel continuous cleat; 6-inch wide stainless steel spring clips	Cleat secured with #10-2” stainless steel screws spaced 12-inch o.c. on the vertical face and 1-inch from the upper horizontal surface; Spring clips spaced 48-inch o.c. over the rail	Snapped into place	**-198**
A-22	Elevate Rail Fascia-BUR/Modified Version	H: Max 5” M: Min. 0.040” Al or Min. 24 ga steel	Min. 20 ga. galvanized steel rail; 6-inch wide stainless steel spring clips	Rail secured with #10-2” stainless steel screws spaced 12-inch o.c. on the vertical face and 1.25-inch from the top of the rail; Spring clips spaced 48-inch o.c. over the rail	Snapped into place	**-209.5**

This evaluation report is provided for State of Florida product approval under Rule 61G20-3. The manufacturer shall notify CREEK Technical Services, LLC of any product changes or quality assurance changes throughout the duration for which this report is valid. This evaluation report does not express nor imply warranty, installation, recommended use, or other product attributes that are not specifically addressed herein.

Elevate Fascia, Edge Flashing and Gravel Stops						
System Number	Name	Face Height (H) & Material (M)	Attachment Component	Attachment Component Detail	Cover Attachment	*MDP* (psf)
A-23	Elevate Anchorgard Drip Edge	H: Max 6” M: Min. 0.040” Al or Min. 24 ga steel	Extruded Al Anchor Bar	Anchor bar secured with #10-1.5” stainless steel screws on the vertical face in two (2) staggered rows with the top row spaced 12-inch o.c. and 1.25-inch from the top of anchor bar and the bottom row spaced 24-inch o.c. and 2.75-inch from the top of anchor bar	Slid over anchor bar	**-288.5**

Elevate Coping							
System No.	Anchor Clips (12-inch wide)		Coping Cap				*MDP* (psf)
	Outside face: Secured with two (2) #10-12 x 1” stainless steel screws 1.5-inch from the bottom and on the top of the outside face with two(2) #10 x 1 1/2” stainless steel screws 1.75-inch in from the edge Inside Face: Secured with two (2) #10-12 x 1” stainless steel screws 1.25-inch from the bottom and on the top of the inside face with two (2) #10 x 1 1/2” stainless steel screws 1.125-inch from the edge.		Outside face of coping cap is hooked over the anchor clip and rotated into place. Inside face of coping cap is engaged onto anchor clip by pressing downward until snap lock occurs.				
	Material	Clip Spacing	Material	Wall Width	Outside Face	Inside Face	
B-1	Min. 16 ga. galvanized steel	36-inch o.c.	Min. 0.040” Al or Min. 24 ga steel	Max 24”	Max. 6”	Max. 4”	**-65.5**
B-2	Min. 16 ga. galvanized steel	48-inch o.c.	Min. 0.040” Al or Min. 24 ga steel (outside face ≤ 8.0”)	Max 16”	Max. 12”	Max. 4”	**-73.5**
B-3	Min. 16 ga. galvanized steel	24-inch o.c.	Min. 0.050” Al	Max 32”	Max.6”	Max. 4”	**-76**
B-4	Min. 20 ga. galvanized steel	36-inch o.c.	Min. 0.050” Al	Max 16”	Max. 6”	Max. 4”	**-80.5**
B-5	Min. 16 ga. galvanized steel	36-inch o.c.	Min. 0.050” Al	Max 24”	Max. 6”	Max. 4”	**-93**
B-6	Min. 16 ga. galvanized steel	36-inch o.c.	Min. 0.050” Al	Max 24”	Max.12”	Max. 4”	**-95.5**
B-7	Min. 16 ga. galvanized steel	48-inch o.c.	Min. 0.050” Al	Max 16”	Max. 12”	Max. 4”	**-101**
B-8	Min. 16 ga. galvanized steel	48-inch o.c.	Min. 0.040” Al or Min.24 ga steel	Max 16”	Max. 6”	Max. 4”	**-115.5**
B-9	Min. 16 ga. galvanized steel	48-inch o.c.	Min. 0.040” Al or Min. 24 ga steel	Max 12”	Max.6”	Max. 4”	**-131.5**

This evaluation report is provided for State of Florida product approval under Rule 61G20-3. The manufacturer shall notify CREEK Technical Services, LLC of any product changes or quality assurance changes throughout the duration for which this report is valid. This evaluation report does not express nor imply warranty, installation, recommended use, or other product attributes that are not specifically addressed herein.

Elevate Coping							
System No.	Anchor Clips (12-inch wide)		Coping Cap				*MDP* (psf)
	Outside face: Secured with two (2) #10-12 x 1" stainless steel screws 1.5-inch from the bottom and on the top of the outside face with two(2) #10 x 1 1/2" stainless steel screws 1.75-inch in from the edge Inside Face: Secured with two (2) #10-12 x 1" stainless steel screws 1.25-inch from the bottom and on the top of the inside face with two (2) #10 x 1 1/2" stainless steel screws 1.125-inch from the edge.		Outside face of coping cap is hooked over the anchor clip and rotated into place. Inside face of coping cap is engaged onto anchor clip by pressing downward until snap lock occurs.				
	Material	Clip Spacing	Material	Wall Width	Outside Face	Inside Face	
B-10	Min. 16 ga. galvanized steel	48-inch o.c.	Min. 0.050" Al	Max 16"	Max. 6"	Max. 4"	**-136**
B-11	Min. 16 ga. galvanized steel	48-inch o.c.	Min. 0.040" Al or Min. 24 ga steel	Max 10"	Max.6"	Max. 4"	**-181.5**
B-12	Min. 16 ga. galvanized steel	48-inch o.c.	Min. 0.050" Al	Max 12"	Max.6"	Max. 4"	**-196.5**
B-13	Min. 16 ga. galvanized steel	48-inch o.c.	Min. 0.050" Al	Max 10"	Max.6"	Max. 4"	**-201.5**

Elevate Continuous Cleat Coping								
System No.	Cleats			Coping Cap				*MDP* (psf)
	Continuous Cleats are attached with #14 SS screws spaced 12-inch o.c. and up the indicated spacing from the bottom edge of the cleat and secured to the top face of the wood nailer with #14 SS screws spaced 12-inch o.c. and 0.5-inch from the outside edge of the cleat.			Coping cap is secured over the two cleats and crimped with a 3-inch wide crimp on the inside face at 18-inch o.c.				
	Material	Outside Cleat Attachment	Inside Cleat Attachment	Material	Wall Width	Outside Face	Inside Face	
C-1	Min. 20 ga. galvanized steel	1.6875-inch	1.75-inch	Min. 0.040" Al or Min. 24 ga steel (outside face ≤ 8.0")	Max 24"	Max. 12"	Max. 4"	**-85.5**
C-2	Min. 20 ga. galvanized steel	1.5-inch	1.625-inch	Min. 0.040" Al or Min. 24 ga steel	Max 24"	Max. 6"	Max. 4"	**-88**
C-3	Min. 16 ga. galvanized steel	2.5-inch	1.75-inch	Min. 0.050" Al	Max 32"	Max. 6"	Max. 4"	**-91**
C-4	Min. 20 ga. galvanized steel	1.5-inch	1.625-inch	Min. 0.050" Al	Max 24"	Max. 6"	Max. 4"	**-113**

This evaluation report is provided for State of Florida product approval under Rule 61G20-3. The manufacturer shall notify CREEK Technical Services, LLC of any product changes or quality assurance changes throughout the duration for which this report is valid. This evaluation report does not express nor imply warranty, installation, recommended use, or other product attributes that are not specifically addressed herein.

Elevate Continuous Cleat Coping								
System No.	Cleats			Coping Cap				*MDP* (psf)
	Continuous Cleats are attached with #14 SS screws spaced 12-inch o.c. and up the indicated spacing from the bottom edge of the cleat and secured to the top face of the wood nailer with #14 SS screws spaced 12-inch o.c. and 0.5-inch from the outside edge of the cleat.			Coping cap is secured over the two cleats and crimped with a 3-inch wide crimp on the inside face at 18-inch o.c.				
	Material	Outside Cleat Attachment	Inside Cleat Attachment	Material	Wall Width	Outside Face	Inside Face	
C-5	Min. 20 ga. galvanized steel	2.6785-inch	1.75-inch	Min. 0.050" Al	Max 24"	Max. 12"	Max. 4"	**-120.5**
C-6	Min. 20 ga. galvanized steel	1.25-inch	1.75-inch	Min. 0.040" Al or Min. 24 ga steel (outside face ≤ 8.0")	Max 16"	Max. 12"	Max. 4"	**-136**
C-7	Min. 20 ga. galvanized steel	1.25-inch	1.75-inch	Min. 0.040" Al or Min. 24 ga steel	Max 16"	Max. 6"	Max. 4"	**-156**
C-8	Min. 20 ga. galvanized steel	1.25-inch	1.75-inch	Min. 0.050" Al	Max 16"	Max. 12"	Max. 4"	**-201**
C-9	Min. 20 ga. galvanized steel	1.25-inch	1.75-inch	Min. 0.050" Al	Max 16"	Max. 6"	Max. 4"	**-211**

Elevate Flush Face Coping								
System No.	Anchor Clips (12-inch wide)			Coping Cap				*MDP* (psf)
	Outside face: Secured with two (2) indicated size stainless steel screws 1.5-inch from the bottom and on the top of the outside face with two(2) #10 x1 1/2" stainless steel screws 1.75-inch in from the edge Inside Face: Secured with two (2) indicated size stainless steel screws 1.25-inch from the bottom and on the top of the inside face with two (2) #10 x1 1/2" stainless steel screws 1.125-inch from the edge.			Outside face of coping cap is hooked over the anchor clip and rotated into place. Inside face of coping cap is engaged onto anchor clip by pressing downward until snap lock occurs.				
	Material	Fastener	Clip Spacing	Material	Wall Width	Outside Face	Inside Face	
D-1	Min. 20 ga. galvanized steel	#10-12 x 1"	36-inch o.c.	Min. 0.040" Al or Min. 24 ga steel	Max 16"	Max. 6"	Max. 4"	**-75.5**
D-2	Min. 16 ga. galvanized steel	#10 x 1 1/2"	36-inch o.c.	Min. 0.040" Al or Min. 24 ga steel (outside face ≤ 8.0")	Max 24"	Max. 12"	Max. 4"	**-85.5**
D-3	Min. 16 ga. galvanized steel	#10 x 1 1/2"	24-inch o.c.	Min. 0.050" Al	Max 32"	Max. 6"	Max. 4"	**-85.5**
D-4	Min. 20 ga. galvanized steel	#10 x 2"	36-inch o.c.	Min. 0.050" Al	Max 16"	Max. 6"	Max. 4"	**-90.5**

This evaluation report is provided for State of Florida product approval under Rule 61G20-3. The manufacturer shall notify CREEK Technical Services, LLC of any product changes or quality assurance changes throughout the duration for which this report is valid. This evaluation report does not express nor imply warranty, installation, recommended use, or other product attributes that are not specifically addressed herein.

Elevate Flush Face Coping								
System No.	Anchor Clips (12-inch wide)			Coping Cap				*MDP* (psf)
	Outside face: Secured with two (2) indicated size stainless steel screws 1.5-inch from the bottom and on the top of the outside face with two(2) #10 x1 1/2" stainless steel screws 1.75-inch in from the edge Inside Face: Secured with two (2) indicated size stainless steel screws 1.25-inch from the bottom and on the top of the inside face with two (2) #10 x1 1/2" stainless steel screws 1.125-inch from the edge.			Outside face of coping cap is hooked over the anchor clip and rotated into place. Inside face of coping cap is engaged onto anchor clip by pressing downward until snap lock occurs.				
	Material	Fastener	Clip Spacing	Material	Wall Width	Outside Face	Inside Face	
D-5	Min. 16 ga. galvanized steel	#10 x 1 1/2"	36-inch o.c.	Min. 0.050" Al	Max 24"	Max. 12"	Max. 4"	**-95.5**
D-6	Min. 16 ga. galvanized steel	#10 x 1 1/2"	36-inch o.c.	Min. 0.040" Al or Min. 24 ga steel	Max 24"	Max. 6"	Max. 4"	**-105.5**
D-7	Min. 16 ga. galvanized steel	#10 x 1 1/2"	48-inch o.c.	Min. 0.040" Al or Min. 24 ga steel (outside face ≤ 8.0")	Max 16"	Max. 12"	Max. 4"	**-116**
D-8	Min. 16 ga. galvanized steel	#10 x 1 1/2"	36-inch o.c.	Min. 0.050" Al	Max 24"	Max. 6"	Max. 4"	**-118**
D-9	Min. 16 ga. galvanized steel	#10 x 1 1/2"	48-inch o.c.	Min. 0.050" Al	Max 16"	Max. 12"	Max. 4"	**-130.5**
D-10	Min. 16 ga. galvanized steel	#14 x 2"	48-inch o.c.	Min. 0.040" Al or Min. 24 ga steel	Max 12"	Max. 6"	Max. 4"	**-171.5**
D-11	Min. 16 ga. galvanized steel	#10 x 1 1/2"	48-inch o.c.	Min. 0.040" Al or Min. 24 ga steel	Max 10"	Max. 6"	Max. 4"	**-191.5**
D-12	Min. 16 ga. galvanized steel	#10 x 1 1/2"	48-inch o.c.	Min. 0.050" Al	Max 12"	Max. 6"	Max. 4"	**-201.5**
D-13	Min. 16 ga. galvanized steel	#14 x 2"	48-inch o.c.	Min. 0.050" Al	Max 10"	Max. 6"	Max. 4"	**-256.5**

This evaluation report is provided for State of Florida product approval under Rule 61G20-3. The manufacturer shall notify CREEK Technical Services, LLC of any product changes or quality assurance changes throughout the duration for which this report is valid. This evaluation report does not express nor imply warranty, installation, recommended use, or other product attributes that are not specifically addressed herein.

Elevate Gold Coping								
System No.	Anchor Clips (12-inch wide)			Coping Cap				*MDP* (psf)
	Outside face: Secured with two(2) #10 x1 1/2" stainless steel screws 1.5-inch from the bottom and on the top of the outside face with two(2) #10 x1 1/2" stainless steel screws 1.75-inch in from the edge Inside Face: Secured with two (2) indicated size stainless steel screws 1.25-inch from the bottom and on the top of the inside face with two (2) #10 x1 1/2" stainless steel screws 1.125-inch from the edge.			Outside face of coping cap is hooked over the anchor clip and rotated into place. Inside face of coping cap is engaged onto anchor clip by pressing downward until snap lock occurs.				
	Material	Fastener	Clip Spacing	Material	Wall Width	Outside Face	Inside Face	
E-1	Min. 16 ga. galvanized steel	#10 x 1 1/2"	36-inch o.c.	Min. 0.040" Al or Min. 24 ga steel (outside face ≤ 8.0")	Max 16"	Max. 12"	Max. 4"	**-113.5**
E-2	Min. 16 ga. galvanized steel	#10 x 2"	36-inch o.c.	Min. 0.040" Al or Min. 24 ga steel	Max 16"	Max. 6"	Max. 4"	**-121**
E-3	Min. 16 ga. galvanized steel	#10 x 1 1/2"	36-inch o.c.	Min. 0.050" Al	Max 16"	Max. 12"	Max. 4"	**-126.5**
E-4	Min. 16 ga. galvanized steel	#10 x 2"	36-inch o.c.	Min. 0.050" Al	Max 16"	Max. 6"	Max. 4"	**-131**

Elevate Single Cantilever Coping								
System No.	Anchor Clips (12-inch wide)			Coping Cap				*MDP* (psf)
	Outside face: Secured on the top with two(2) #10 x1 1/2" stainless steel screws 4.5-inch from the edge and with two(2) #10 x1 1/2" stainless steel screws 5-inch in from the edge Inside Face: Secured to the inside face with two (2) #10 x1 1/2" stainless steel screws indicated spacing #1 from the bottom and on the top of the inside face with two (2) #10 x1 1/2" stainless steel screws indicated spacing #2 from the edge.			Outside face of coping cap is hooked over the anchor clip and rotated into place. Inside face of coping cap is engaged onto anchor clip by pressing downward until snap lock occurs.				
	Material	Fastener Spacing	Clip Spacing	Material	Wall Width	Outside Face	Inside Face	
F-1	Min. 16 ga. galvanized steel	#1: 1.375-inch from the bottom #2: 2.5-inch from the edge	36-inch o.c.	Min. 0.040" Al or Min. 24 ga steel (outside face ≤ 8.0")	Max 24"	Max. 10"	Max. 4"	**-75.5**
F-2	Min. 20 ga. galvanized steel riser and min. 16 ga. galvanized steel base	#1: 1.375-inch from the bottom #2: 2.5-inch from the edge	36-inch o.c.	Min. 0.050" Al	Max 24"	Max. 10"	Max. 4"	**-80.5**
F-3	Min. 20 ga. galvanized steel	#1: 1.75-inch from the bottom #2: 1.5-inch from the edge	36-inch o.c.	Min. 0.040" Al or Min. 24 ga steel	Max 16"	Max. 6"	Max. 4"	**-110.5**

This evaluation report is provided for State of Florida product approval under Rule 61G20-3. The manufacturer shall notify CREEK Technical Services, LLC of any product changes or quality assurance changes throughout the duration for which this report is valid. This evaluation report does not express nor imply warranty, installation, recommended use, or other product attributes that are not specifically addressed herein.

Elevate Single Cantilever Coping								
System No.	Anchor Clips (12-inch wide)			Coping Cap				*MDP* (psf)
	Outside face: Secured on the top with two(2) #10 x1 1/2" stainless steel screws 4.5-inch from the edge and with two(2) #10 x1 1/2" stainless steel screws 5-inch in from the edge Inside Face: Secured to the inside face with two (2) #10 x1 1/2" stainless steel screws indicated spacing #1 from the bottom and on the top of the inside face with two (2) #10 x1 1/2" stainless steel screws indicated spacing #2 from the edge.			Outside face of coping cap is hooked over the anchor clip and rotated into place. Inside face of coping cap is engaged onto anchor clip by pressing downward until snap lock occurs.				
	Material	Fastener Spacing	Clip Spacing	Material	Wall Width	Outside Face	Inside Face	
F-4	Min. 20 ga. galvanized steel riser and min. 16 ga. galvanized steel base	#1: 1.75-inch from the bottom #2: 1.5-inch from the edge	36-inch o.c.	Min. 0.050" Al	Max 16"	Max. 6"	Max. 4"	**-110.5**

This evaluation report is provided for State of Florida product approval under Rule 61G20-3. The manufacturer shall notify CREEK Technical Services, LLC of any product changes or quality assurance changes throughout the duration for which this report is valid. This evaluation report does not express nor imply warranty, installation, recommended use, or other product attributes that are not specifically addressed herein.

Product:	**Elevate Anchorgard SP Fascia** **Elevate Anchorgard MB Fascia** **Elevate Anchorgard Platinum Fascia**

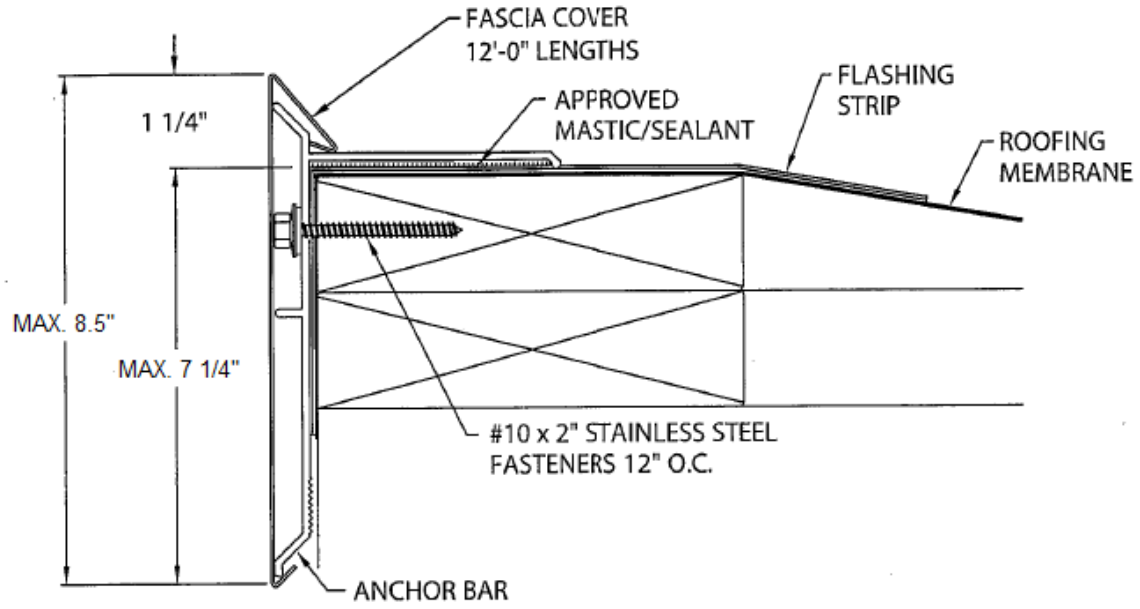

Product:	**Elevate Anchorgard SP Extended Fascia – Single Ply**

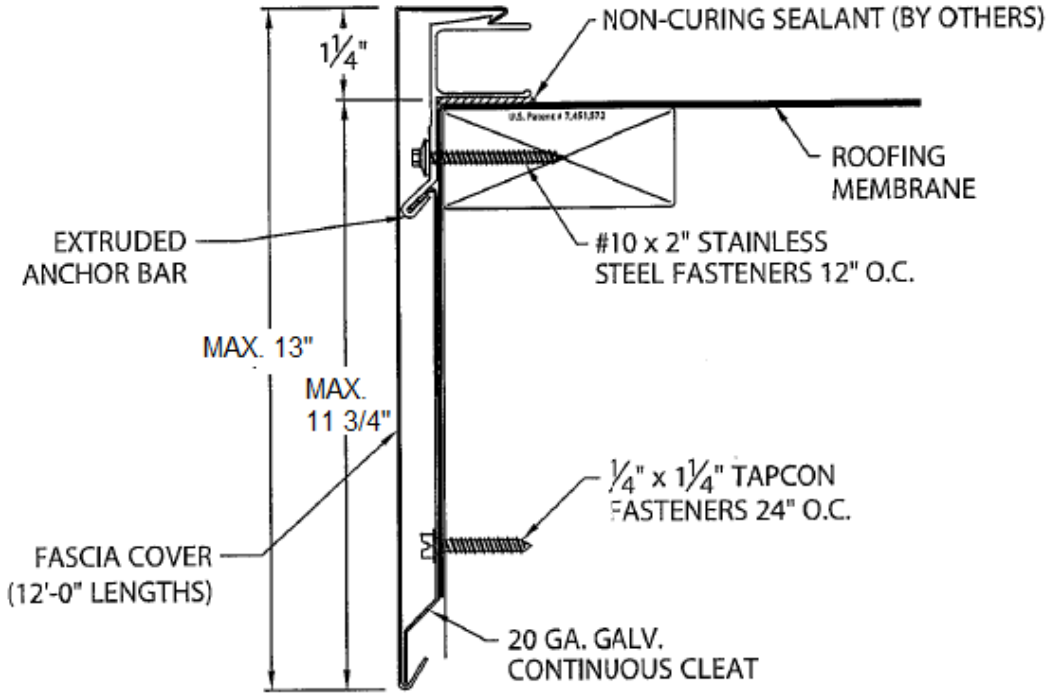

This evaluation report is provided for State of Florida product approval under Rule 61G20-3. The manufacturer shall notify CREEK Technical Services, LLC of any product changes or quality assurance changes throughout the duration for which this report is valid. This evaluation report does not express nor imply warranty, installation, recommended use, or other product attributes that are not specifically addressed herein.

Product:	**Elevate Anchorgard MB Extended Fascia – BUR/MOD Version** **Elevate Anchorgard Platinum Extended Fascia – BUR/MOD Version**

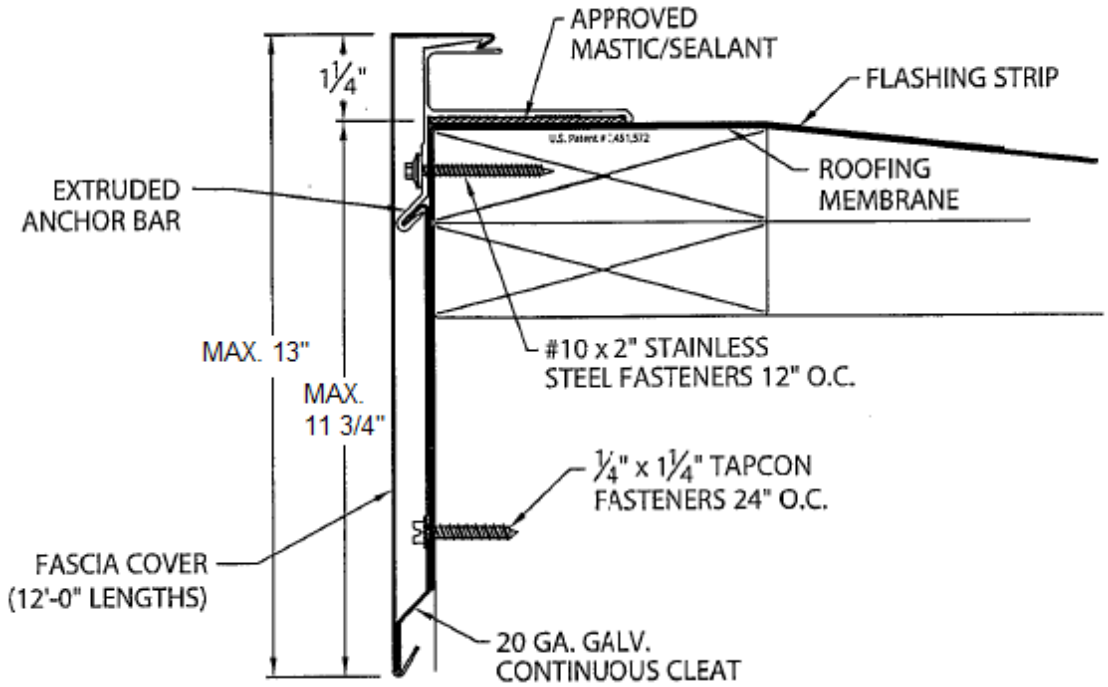

Product:	**Elevate Anchorgard Extended Canted Fascia – Galvanized Waterdam Version**

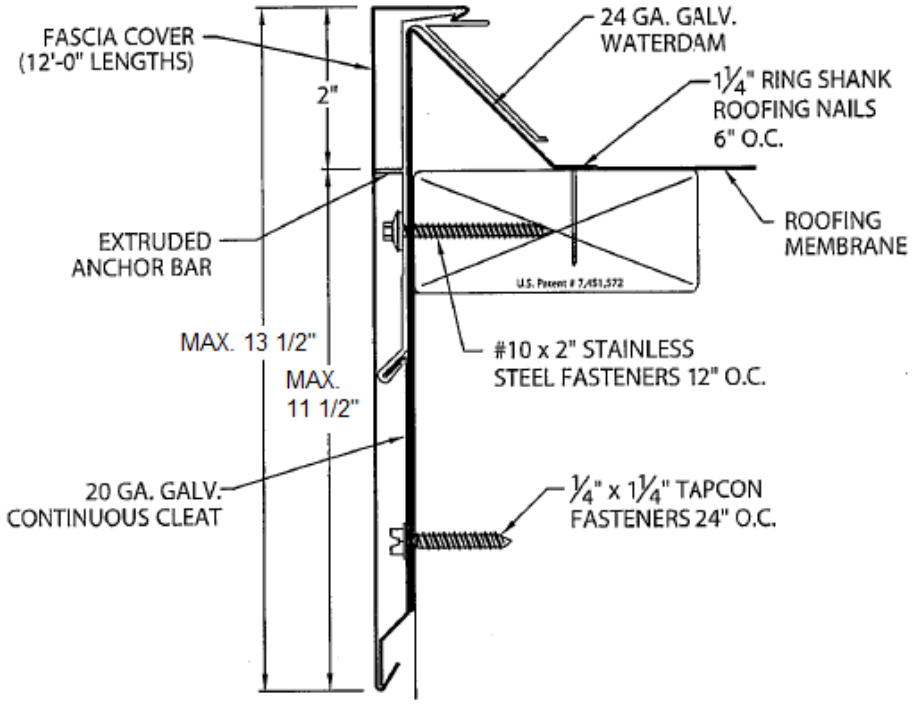

This evaluation report is provided for State of Florida product approval under Rule 61G20-3. The manufacturer shall notify CREEK Technical Services, LLC of any product changes or quality assurance changes throughout the duration for which this report is valid. This evaluation report does not express nor imply warranty, installation, recommended use, or other product attributes that are not specifically addressed herein.

Product:	**Elevate Anchorgard Drip Edge**

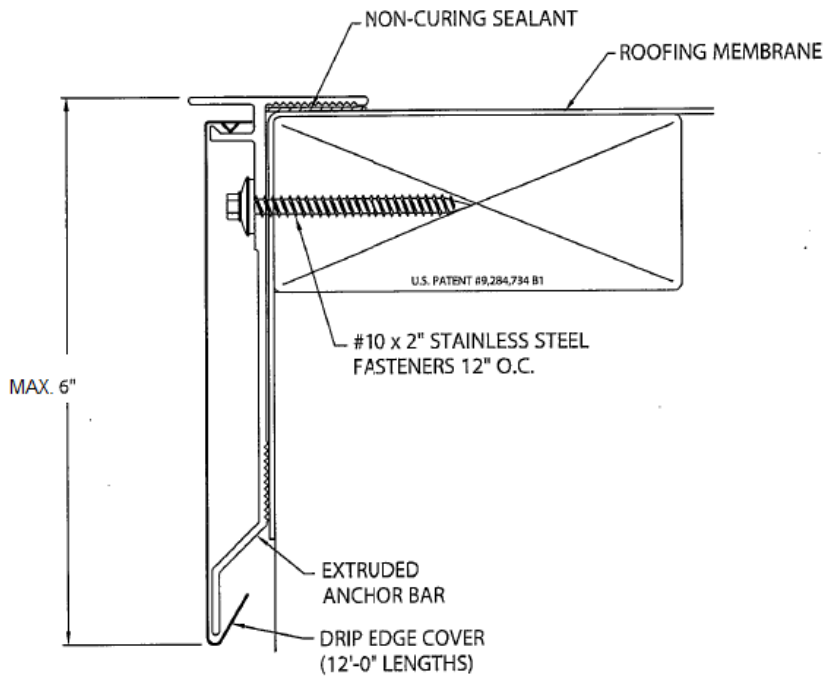

Product:	**Elevate Anchorgard SP HG Fascia**

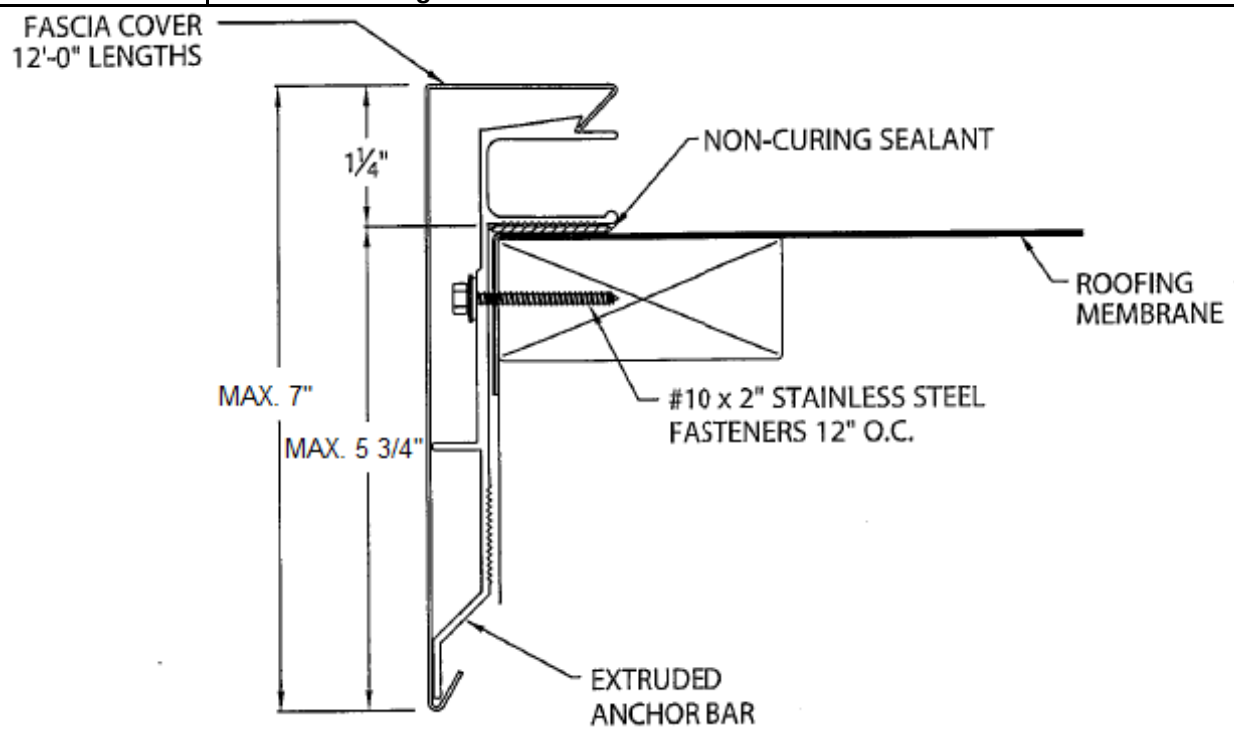

This evaluation report is provided for State of Florida product approval under Rule 61G20-3. The manufacturer shall notify CREEK Technical Services, LLC of any product changes or quality assurance changes throughout the duration for which this report is valid. This evaluation report does not express nor imply warranty, installation, recommended use, or other product attributes that are not specifically addressed herein.

Product:	**Elevate Anchorgard Platinum HG Fascia**

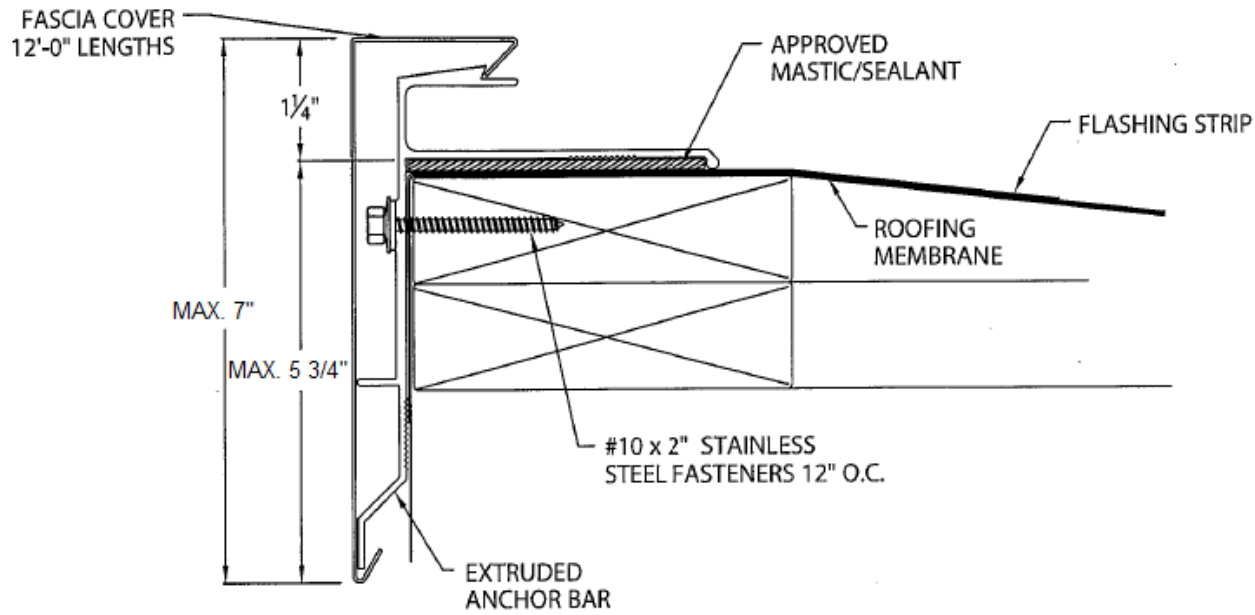

Product:	**Elevate Rail Fascia – BUR/Mod Version**

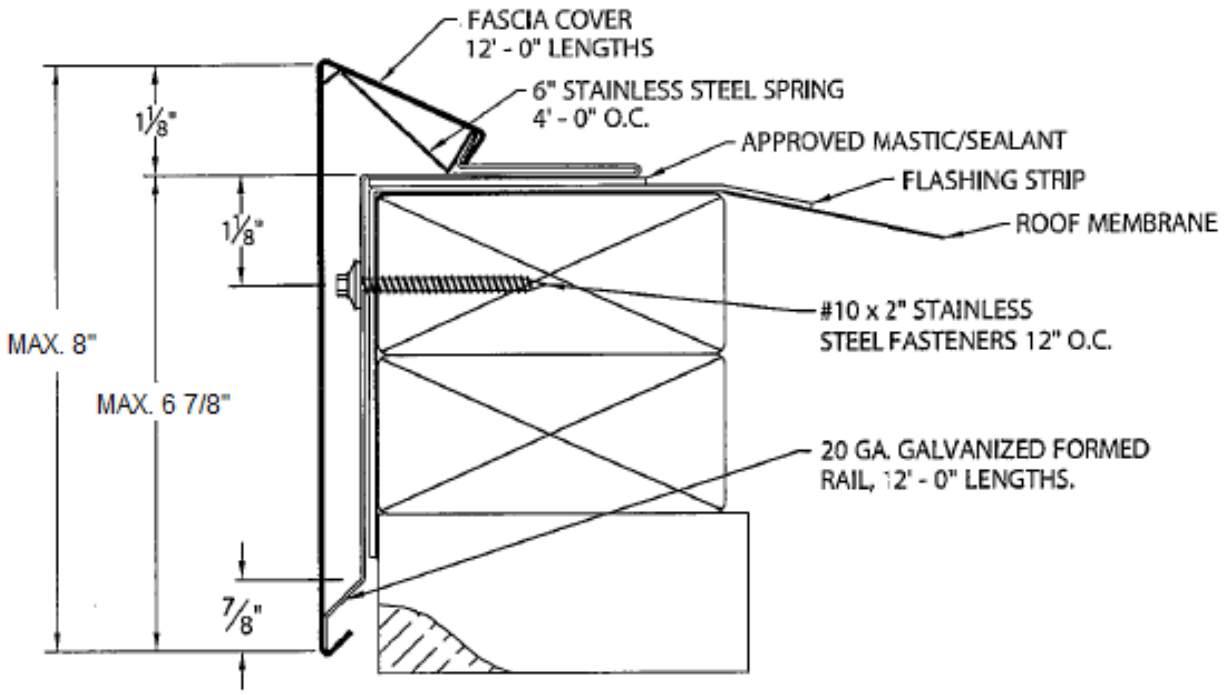

This evaluation report is provided for State of Florida product approval under Rule 61G20-3. The manufacturer shall notify CREEK Technical Services, LLC of any product changes or quality assurance changes throughout the duration for which this report is valid. This evaluation report does not express nor imply warranty, installation, recommended use, or other product attributes that are not specifically addressed herein.

Product:	**Elevate Flash-Through Drip Edge – BUR/Mod Version with Continuous Cleat**

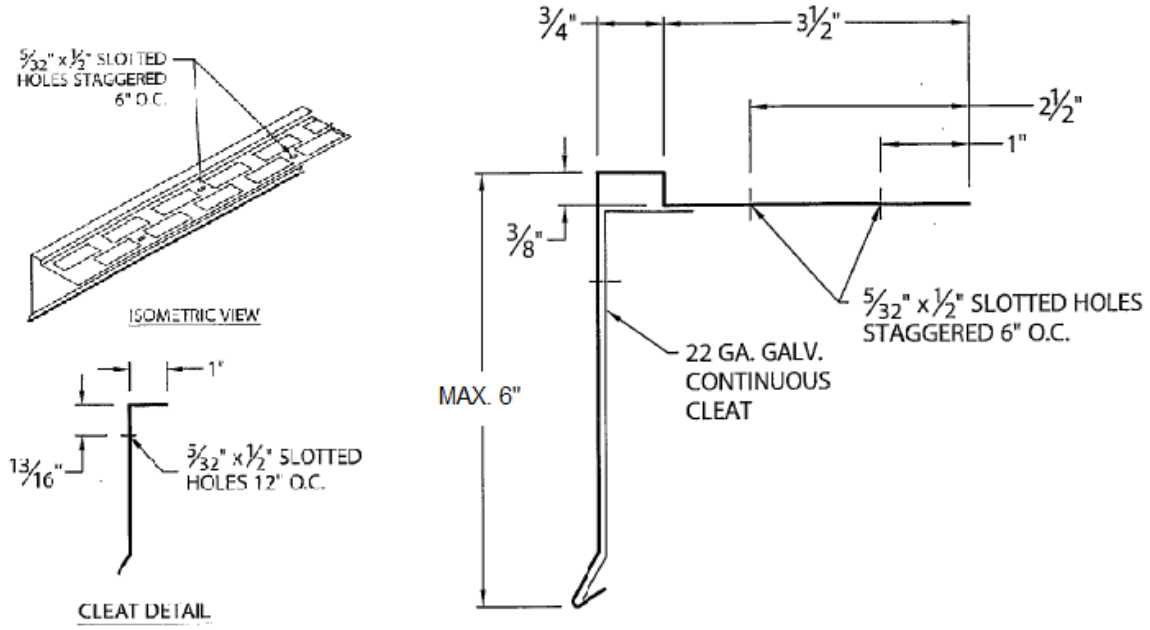

Product:	**Elevate Drip Edge with Continuous Cleat** **Elevate TPO Drip Edge with Continuous Cleat** **Elevate PVC Drip Edge with Continuous Cleat**

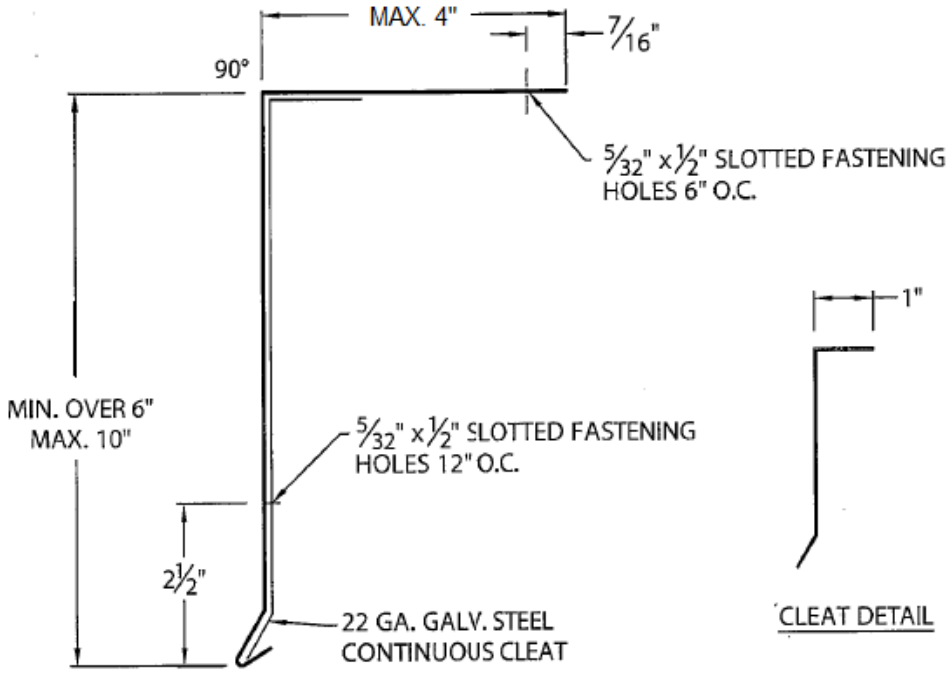

This evaluation report is provided for State of Florida product approval under Rule 61G20-3. The manufacturer shall notify CREEK Technical Services, LLC of any product changes or quality assurance changes throughout the duration for which this report is valid. This evaluation report does not express nor imply warranty, installation, recommended use, or other product attributes that are not specifically addressed herein.

Continued from previous page

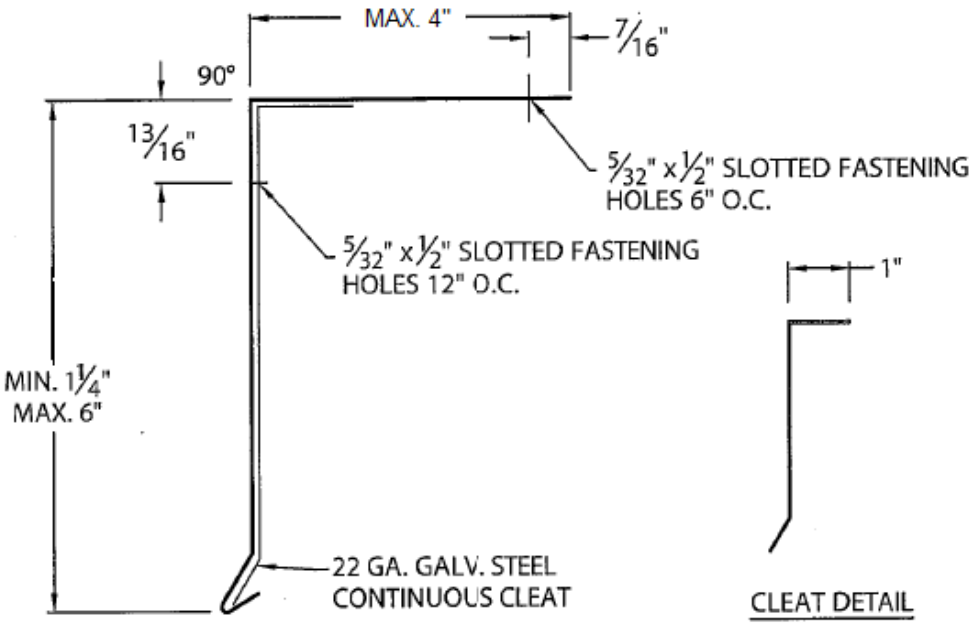

Product:	**Elevate Rail Fascia – Single Ply Version**

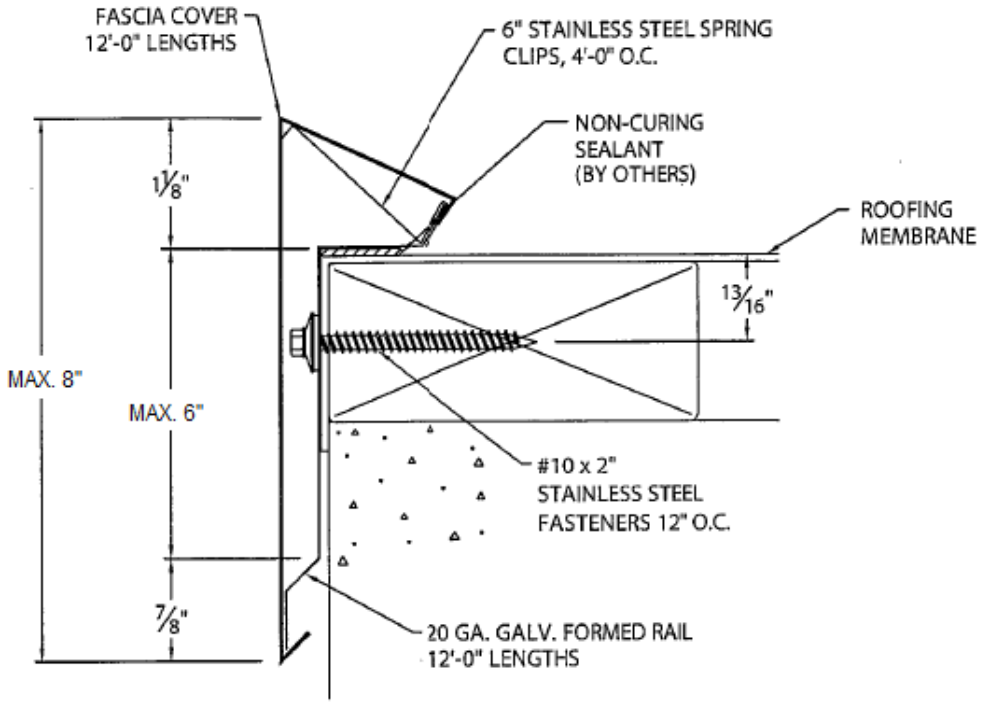

This evaluation report is provided for State of Florida product approval under Rule 61G20-3. The manufacturer shall notify CREEK Technical Services, LLC of any product changes or quality assurance changes throughout the duration for which this report is valid. This evaluation report does not express nor imply warranty, installation, recommended use, or other product attributes that are not specifically addressed herein.

Product:	**Elevate Extended Rail Fascia – Single Ply Version**

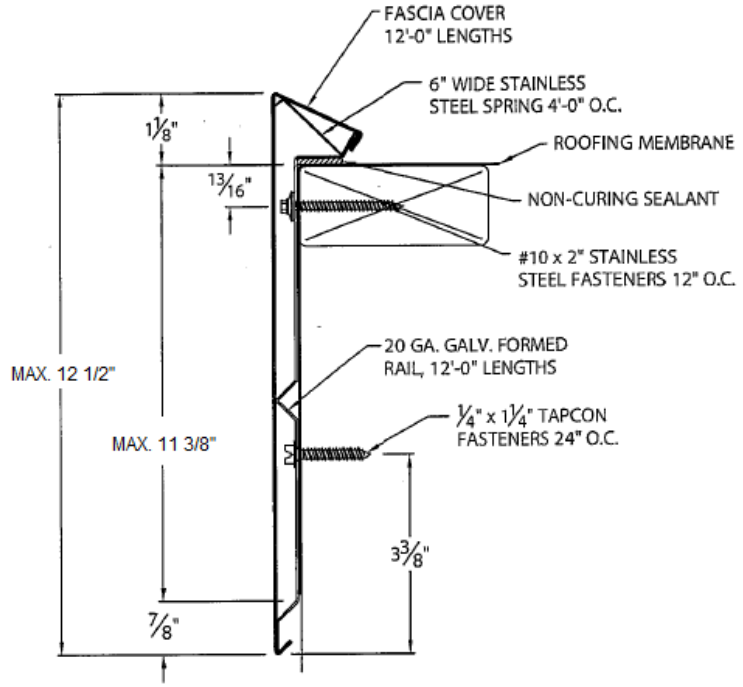

Product:	**Elevate Gravel Stop**

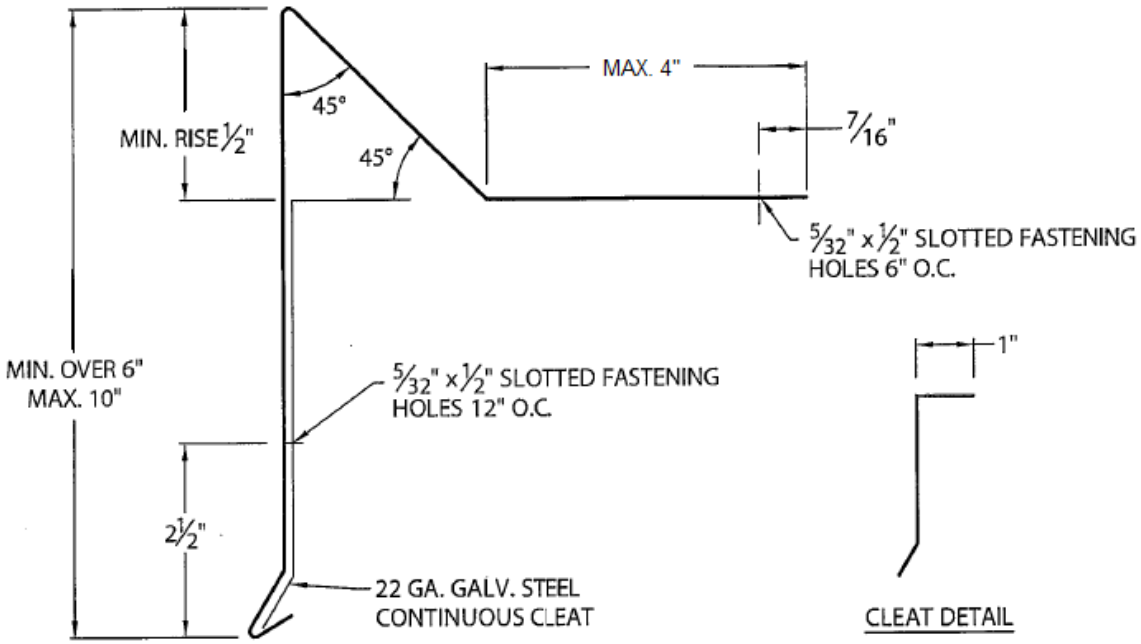

This evaluation report is provided for State of Florida product approval under Rule 61G20-3. The manufacturer shall notify CREEK Technical Services, LLC of any product changes or quality assurance changes throughout the duration for which this report is valid. This evaluation report does not express nor imply warranty, installation, recommended use, or other product attributes that are not specifically addressed herein.

Continued from previous page:

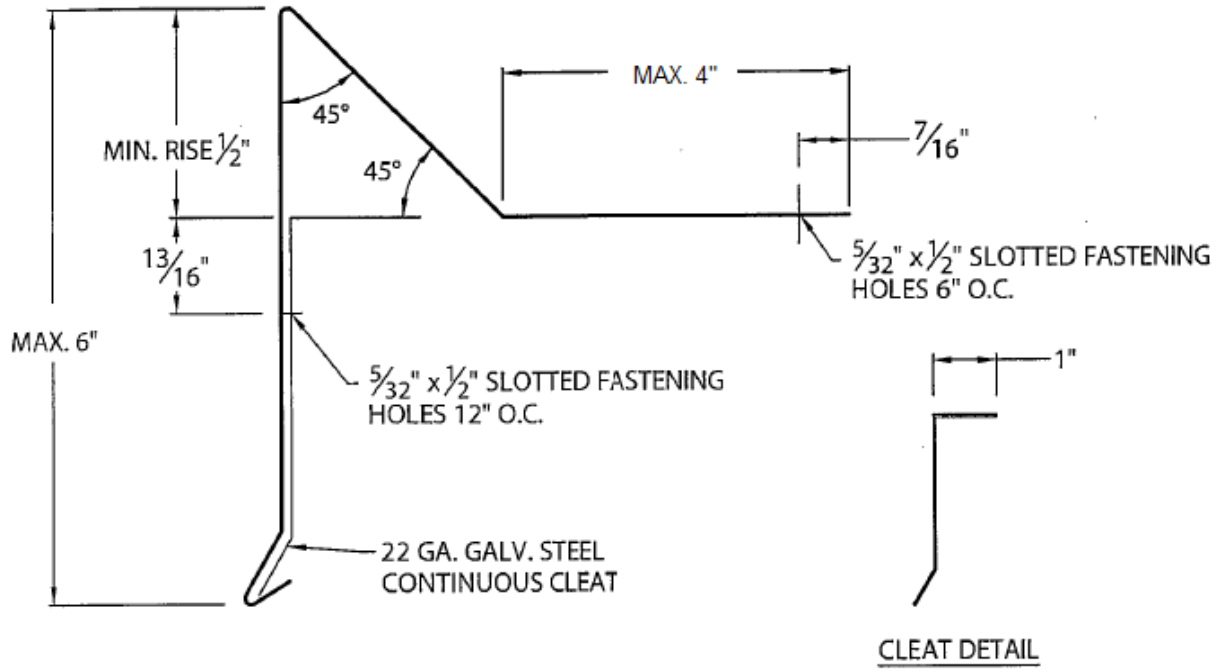

Product:	**Elevate Edgegard + Fascia - Single Ply Application Crimp-On Version**

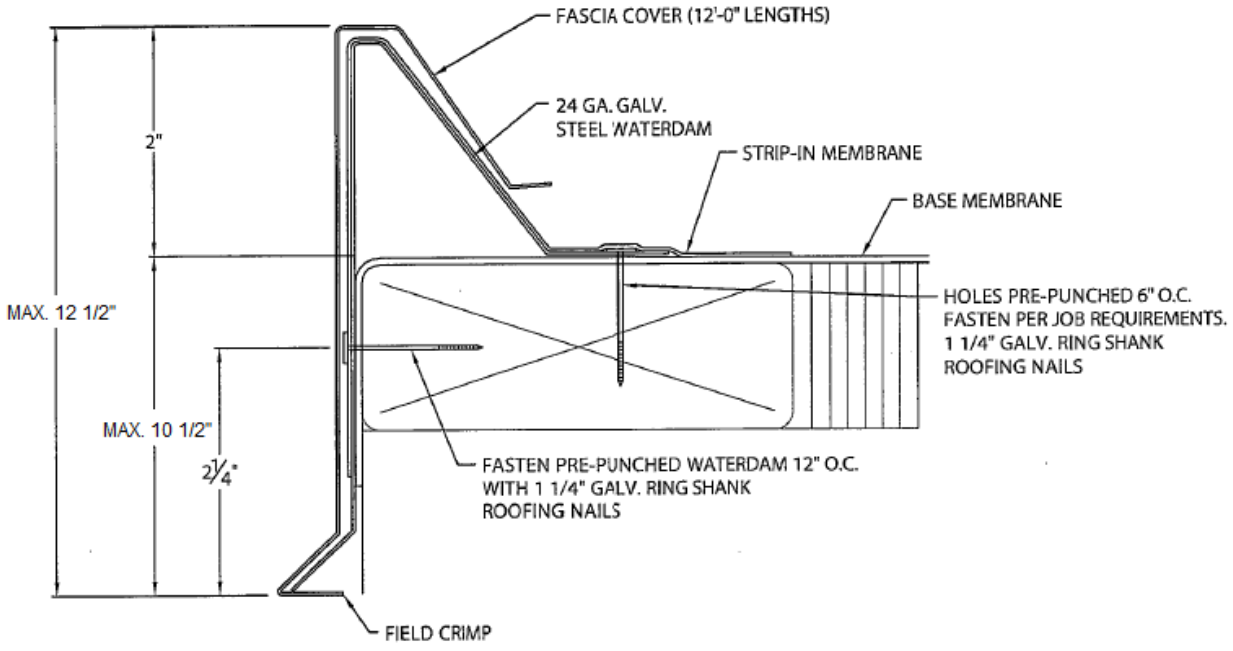

This evaluation report is provided for State of Florida product approval under Rule 61G20-3. The manufacturer shall notify CREEK Technical Services, LLC of any product changes or quality assurance changes throughout the duration for which this report is valid. This evaluation report does not express nor imply warranty, installation, recommended use, or other product attributes that are not specifically addressed herein.

Product:	**Elevate Edgegard + Fascia - Single Ply Application Snap-On Version**

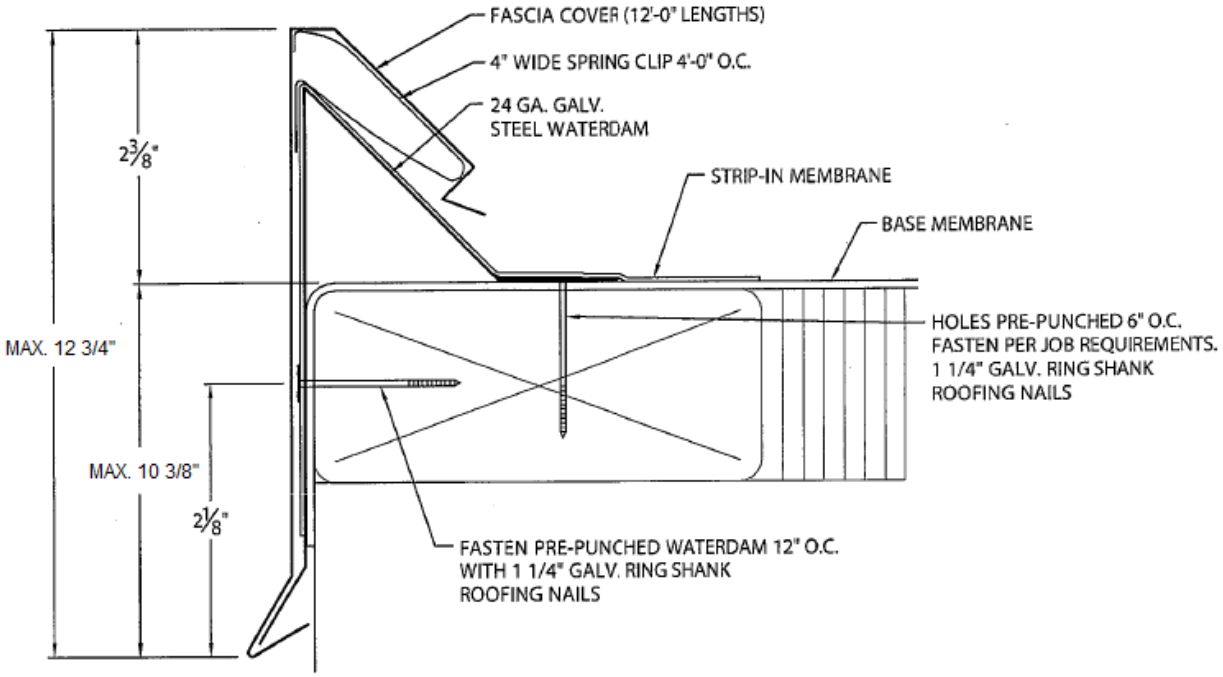

Product:	**Elevate System 300 Fascia – BUR/Mod Snap-On Version**

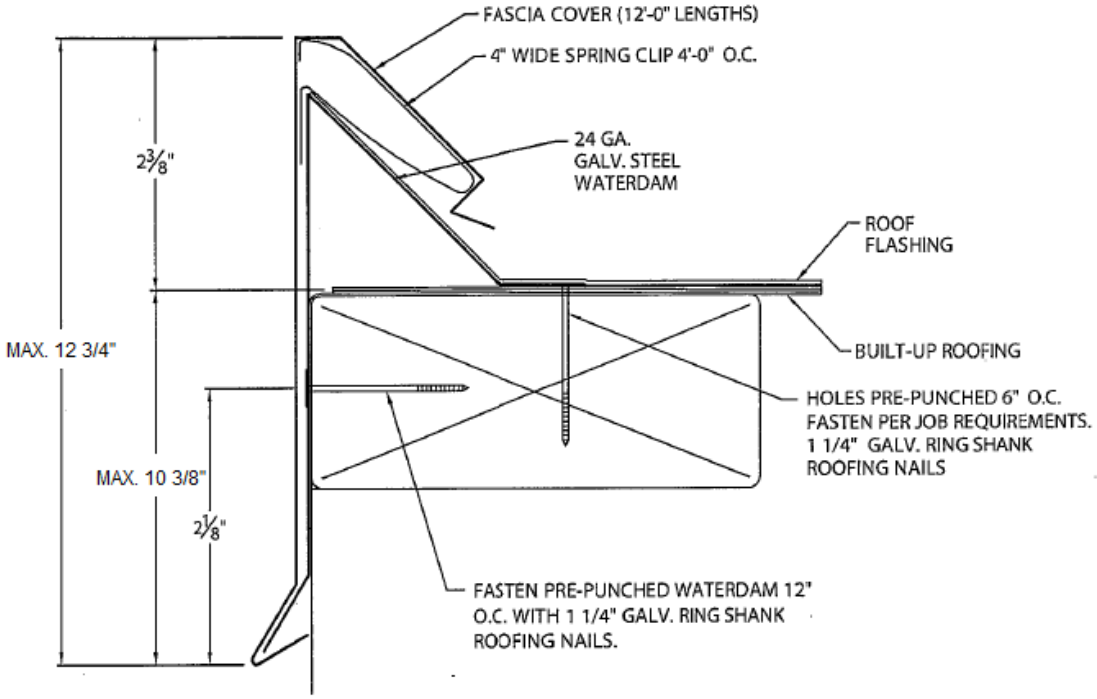

This evaluation report is provided for State of Florida product approval under Rule 61G20-3. The manufacturer shall notify CREEK Technical Services, LLC of any product changes or quality assurance changes throughout the duration for which this report is valid. This evaluation report does not express nor imply warranty, installation, recommended use, or other product attributes that are not specifically addressed herein.

Product:	**Elevate Coping**

Tapered:

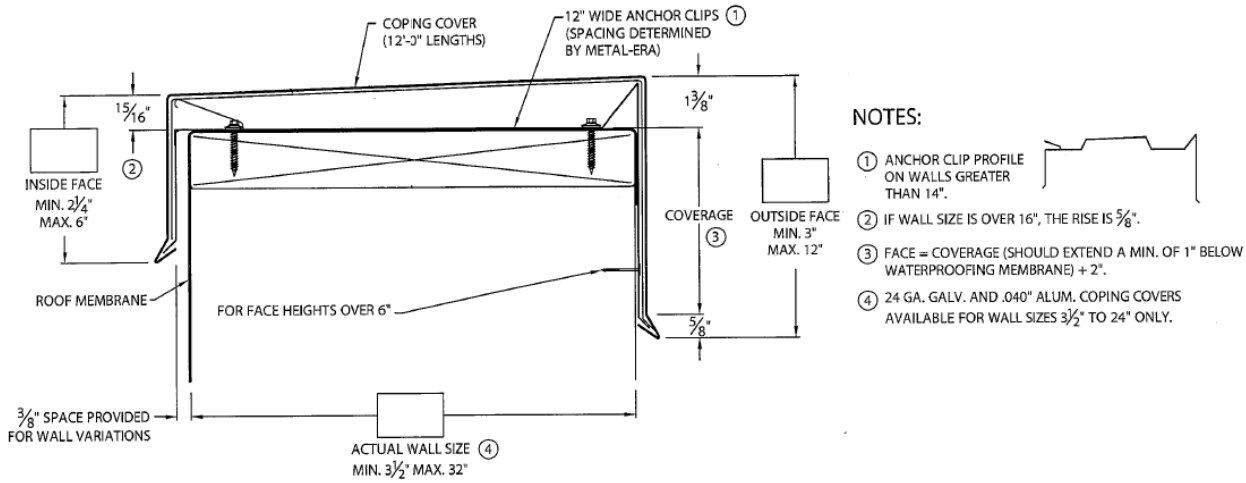

Flat:

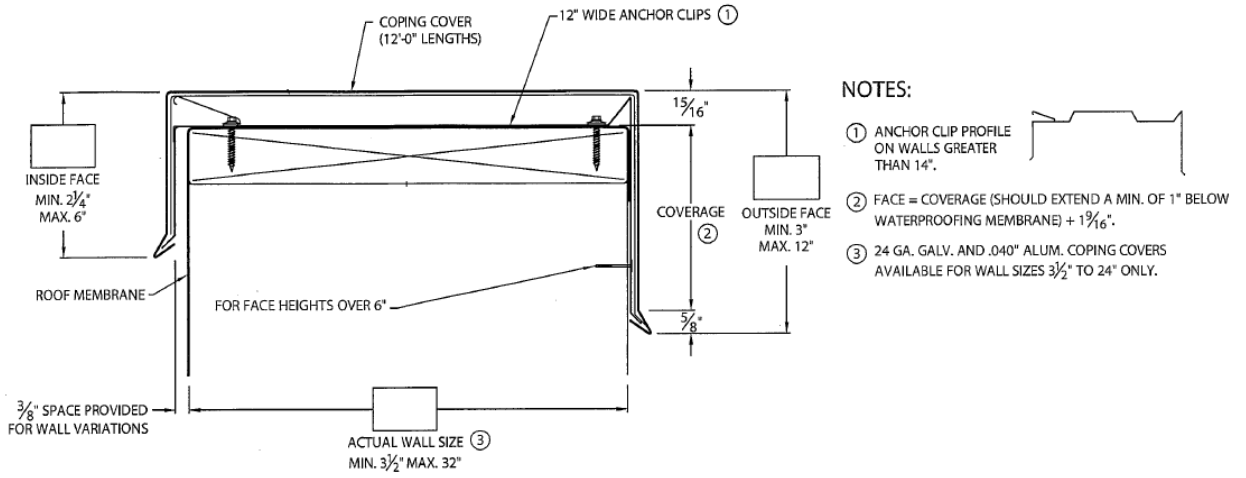

Existing Slope:

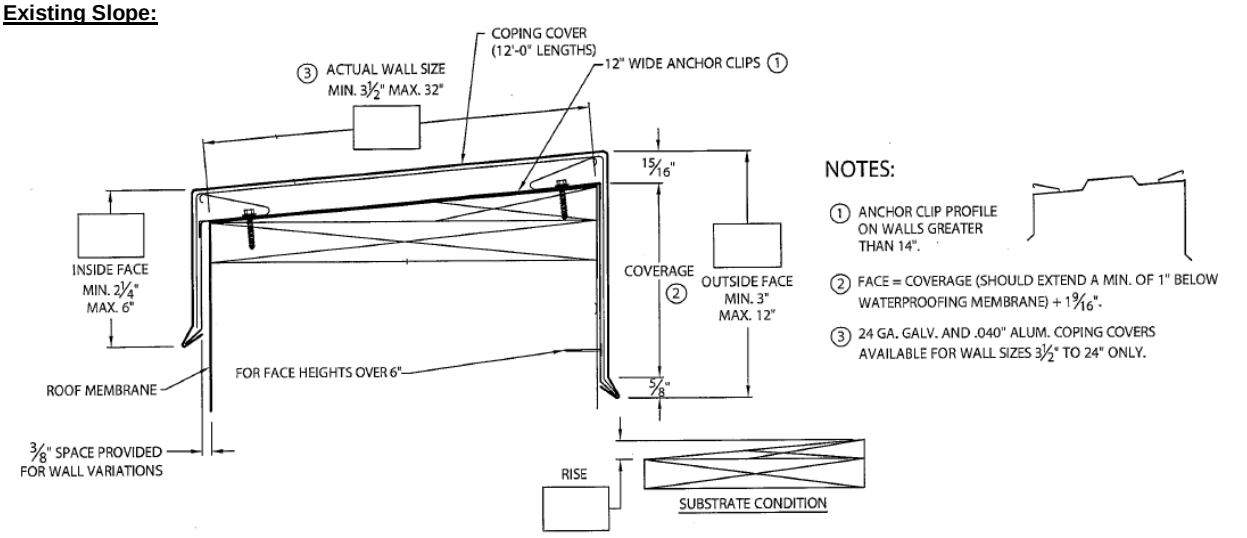

This evaluation report is provided for State of Florida product approval under Rule 61G20-3. The manufacturer shall notify CREEK Technical Services, LLC of any product changes or quality assurance changes throughout the duration for which this report is valid. This evaluation report does not express nor imply warranty, installation, recommended use, or other product attributes that are not specifically addressed herein.

Product:	**Elevate Flush Face Coping**

Tapered:

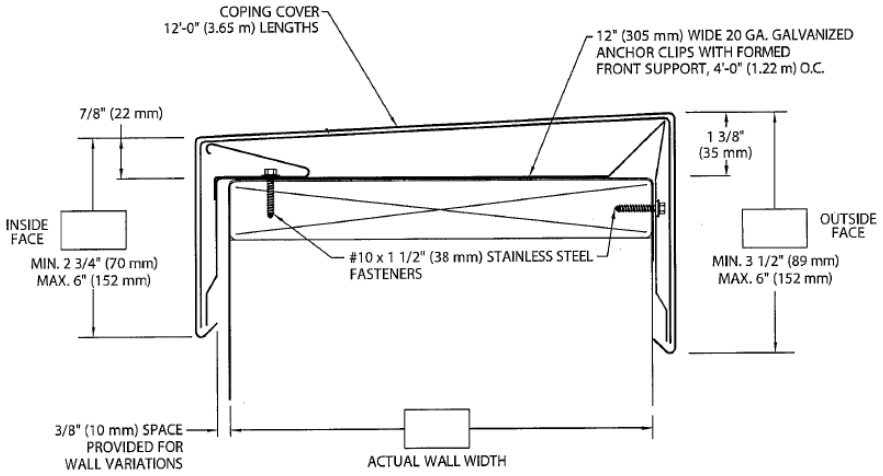

Flat:

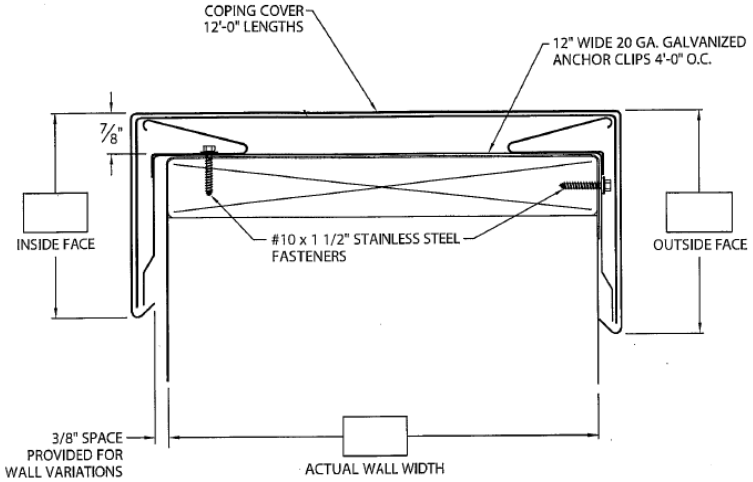

Existing Slope:

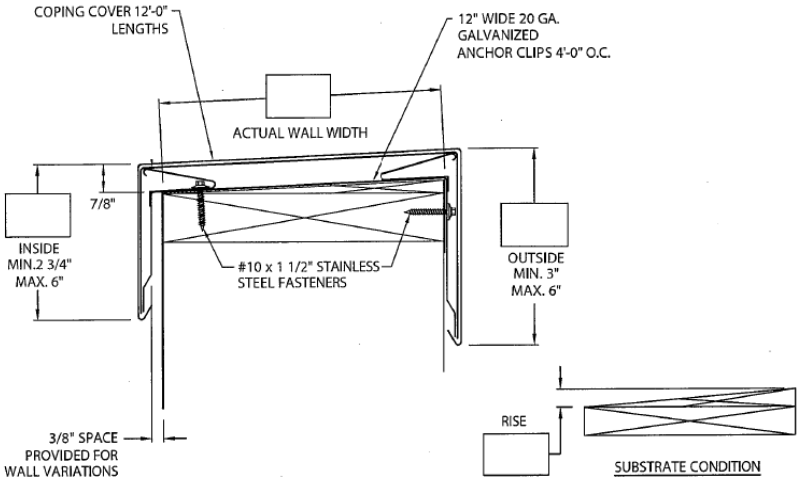

This evaluation report is provided for State of Florida product approval under Rule 61G20-3. The manufacturer shall notify CREEK Technical Services, LLC of any product changes or quality assurance changes throughout the duration for which this report is valid. This evaluation report does not express nor imply warranty, installation, recommended use, or other product attributes that are not specifically addressed herein.

Product:	**Elevate Gold Coping**

Tapered:

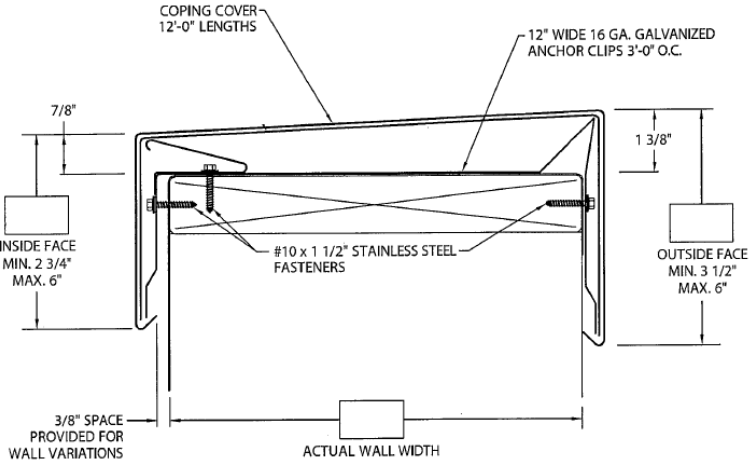

Flat:

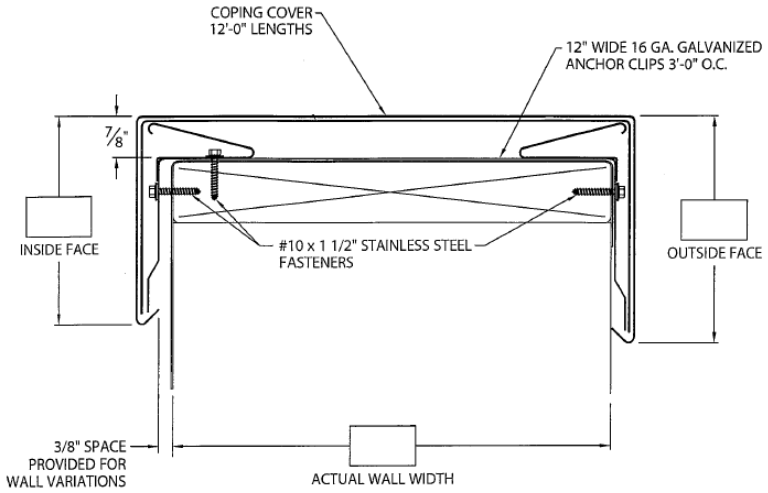

Existing Slope:

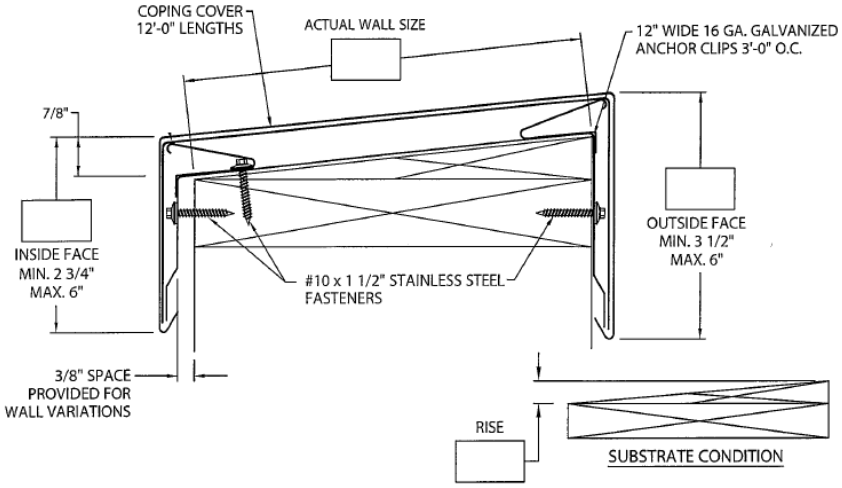

This evaluation report is provided for State of Florida product approval under Rule 61G20-3. The manufacturer shall notify CREEK Technical Services, LLC of any product changes or quality assurance changes throughout the duration for which this report is valid. This evaluation report does not express nor imply warranty, installation, recommended use, or other product attributes that are not specifically addressed herein.

Product:	**Elevate Continuous Cleat Coping**

Tapered:

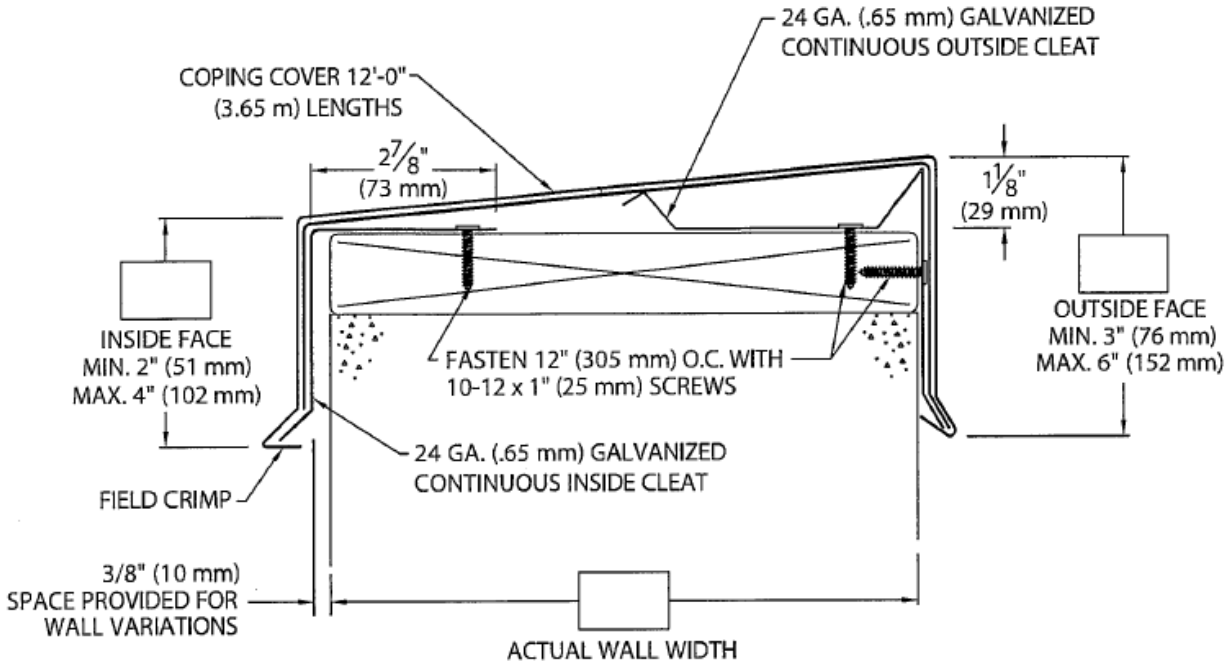

Existing Slope:

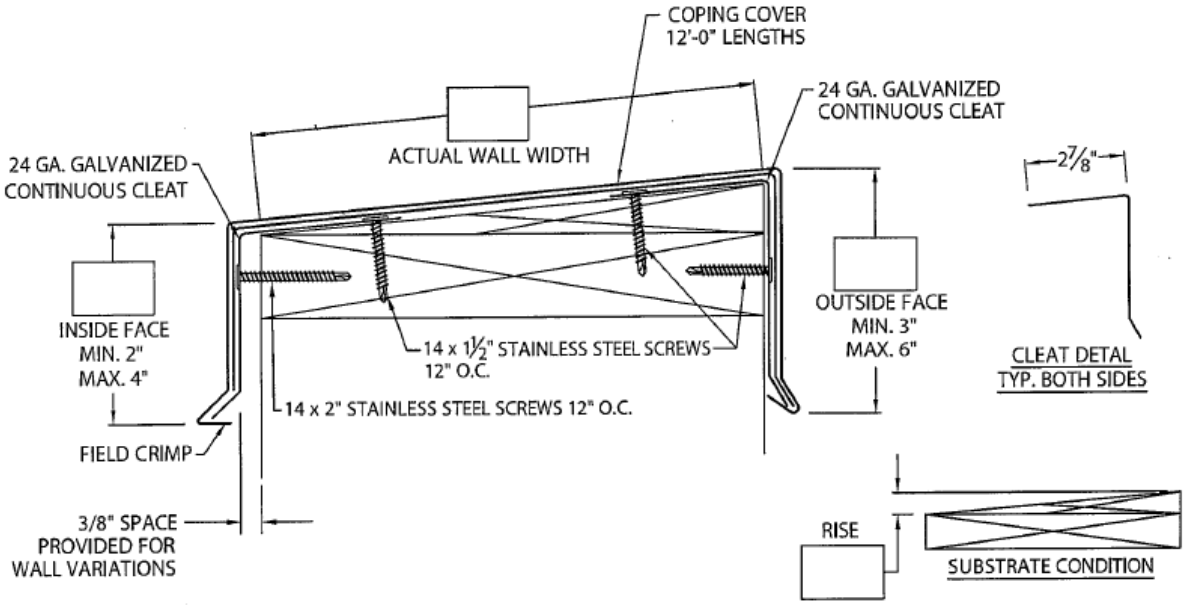

This evaluation report is provided for State of Florida product approval under Rule 61G20-3. The manufacturer shall notify CREEK Technical Services, LLC of any product changes or quality assurance changes throughout the duration for which this report is valid. This evaluation report does not express nor imply warranty, installation, recommended use, or other product attributes that are not specifically addressed herein.

Product:	**Elevate Single Cantilever Coping**

Tapered:

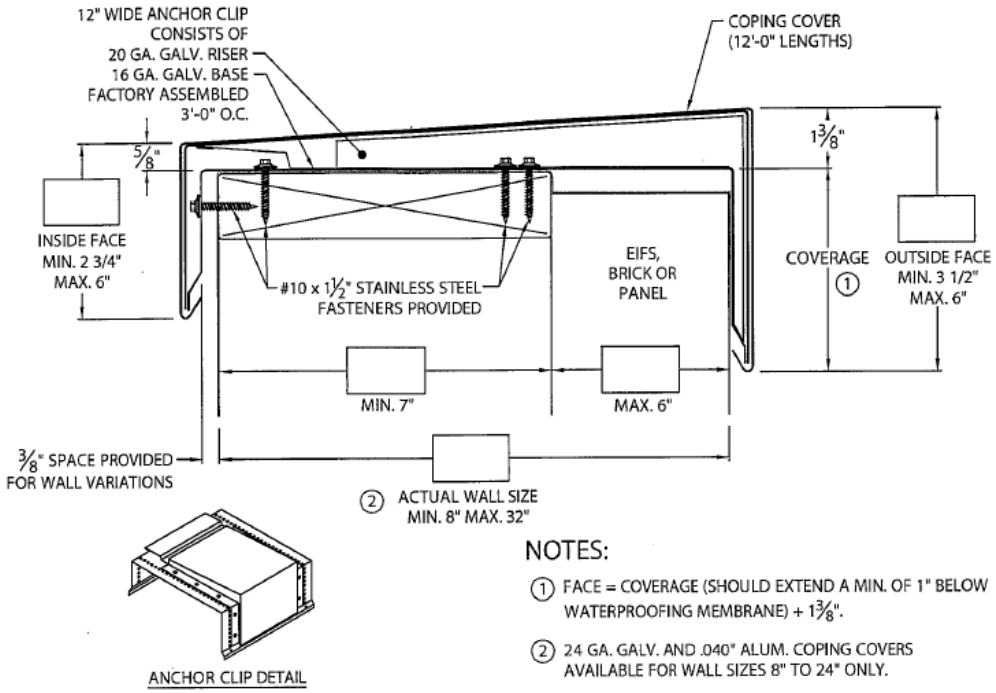

NOTES:

① FACE = COVERAGE (SHOULD EXTEND A MIN. OF 1" BELOW WATERPROOFING MEMBRANE) + 1 3/8".

② 24 GA. GALV. AND .040" ALUM. COPING COVERS AVAILABLE FOR WALL SIZES 8" TO 24" ONLY.

Existing Slope:

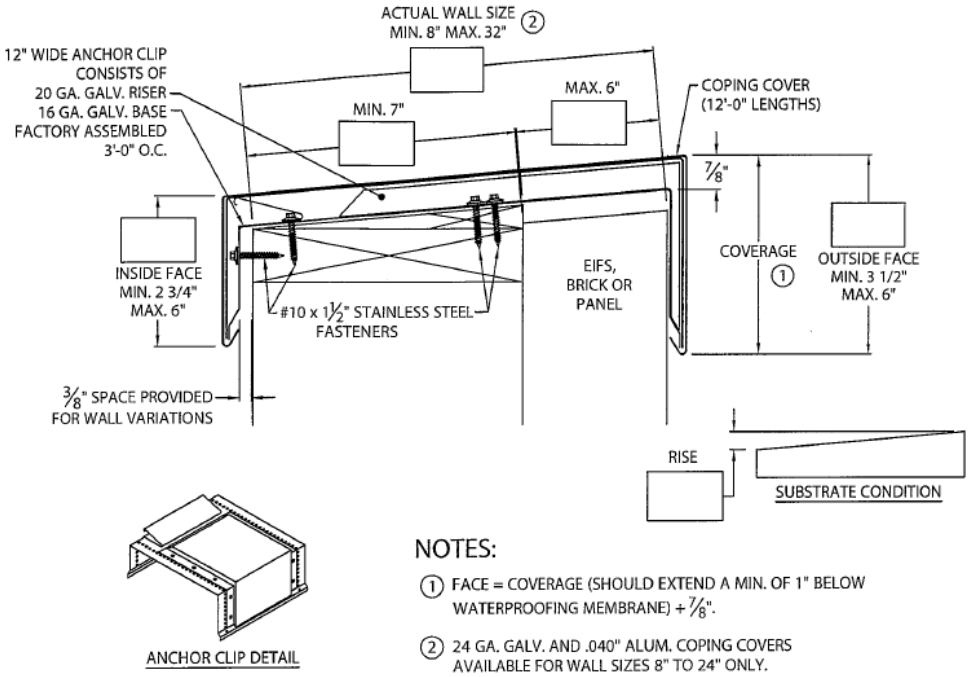

NOTES:

① FACE = COVERAGE (SHOULD EXTEND A MIN. OF 1" BELOW WATERPROOFING MEMBRANE) + 7/8".

② 24 GA. GALV. AND .040" ALUM. COPING COVERS AVAILABLE FOR WALL SIZES 8" TO 24" ONLY.

END OF REPORT

This evaluation report is provided for State of Florida product approval under Rule 61G20-3. The manufacturer shall notify CREEK Technical Services, LLC of any product changes or quality assurance changes throughout the duration for which this report is valid. This evaluation report does not express nor imply warranty, installation, recommended use, or other product attributes that are not specifically addressed herein.